INFINITI FX
FITTING INSTRUCTIONS



Part Description:	**TOWBAR**
Part No.	**G9162-1C000AU**
Model:	**Infiniti FX37,FX50,FX30d (06/2012 ONWARDS)**
Fitting Time:	**2 hours**

NO.	PART NAME	QTY.
1	Towbar	1
2	933067600001 Insert Assy	1
3	333067698102 Receiver	1
4	Reinforcement	1
5	Bracket / Exhaust holder	1
6	Plate	2
7	Bracket LH / RH	2
8	Plate	1
9	Plug Mount	1

NO.	PART NAME	QTY.
10	Door Label	1
11	Plug (KE500-99973)	1
12	Key	2
13	Cap	1
14	Protection cap (KE500-99919) (with Infiniti Logo)	1
15	Bag	1
16	Strap	1
17	FX Bolt Kit	1
18	Fitting Instructions	1

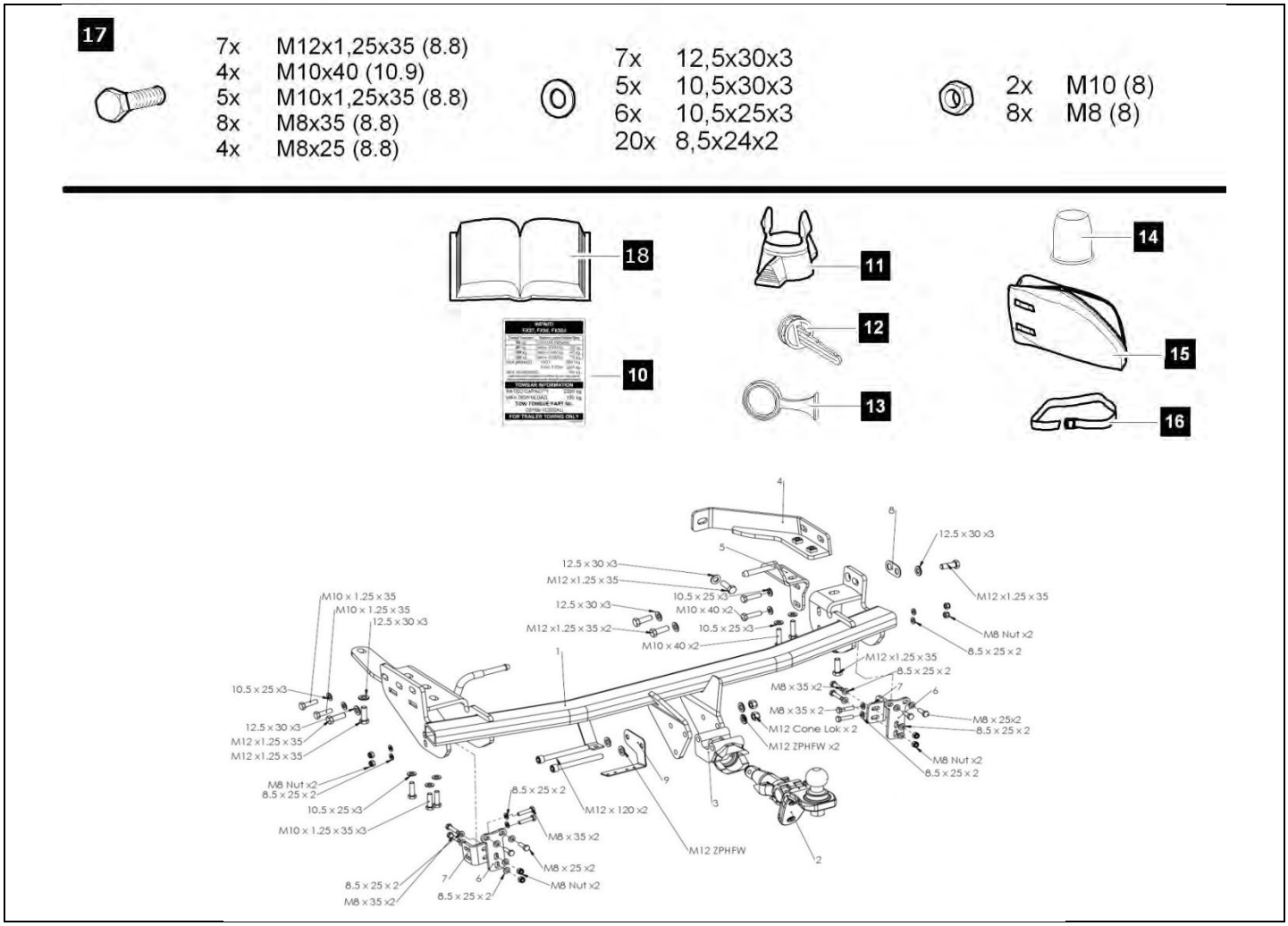

Operating instructions for the detachable ball bar

Important!

Check the following points to ensure correct **locking** of the detachable ball bar before each journey:

- **The green marking on the handwheel is aligned with the green area on the ball bar.**
- **The handwheel is resting against the ball bar (no gap).**
- **The lock is closed and the key is withdrawn. The handwheel cannot be pulled out.**
- **The ball bar must be fully inserted into the receiver and be tight. Check by shaking it.**

Repeat the installation procedure if any of the **4 checks is not satisfactory**.

To minimise the **risk of accidents** the towing device should not be used if any of the requirements is not met. Contact the manufacturer if this occurs. The ball bar can be easily **installed** and **removed** with the normal **force of your hands**. Never use any sort of aids or tools etc. as this might damage the mechanism.

Never unlock if trailers are attached or load bearing implements mounted.

Always remove the ball bar and **insert** the **plug** into the receiver for journeys without a trailer or load bearing implement. This is especially important if the tow ball impedes sight of the vehicle's registration number or lights.

Detachable ball bar

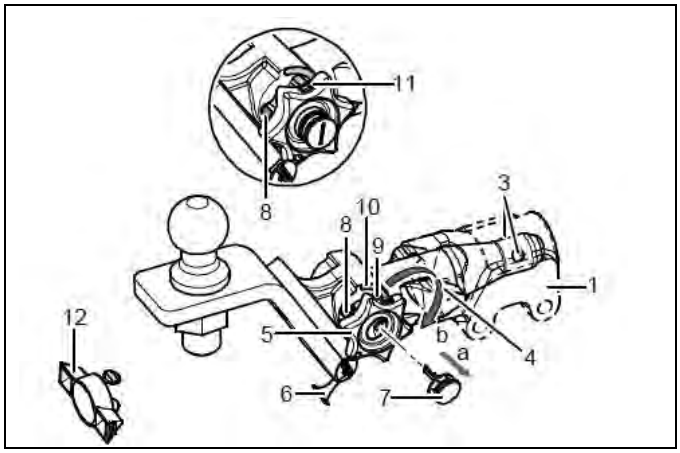

1. **Receiver**
2. **Flange**
3. **Locking balls**
4. **Release lever**
5. **Handwheel**
6. **Cover**
7. **Key**
8. **Red marking (handwheel)**
9. **Green marking (handwheel)**
10. **Green marking (ball bar)**
11. **Symbol (release)**
12. **Plug**
13. **No gap between 2 and 5**
14. **Gap of approx. 5mm**

Locked position, operating condition

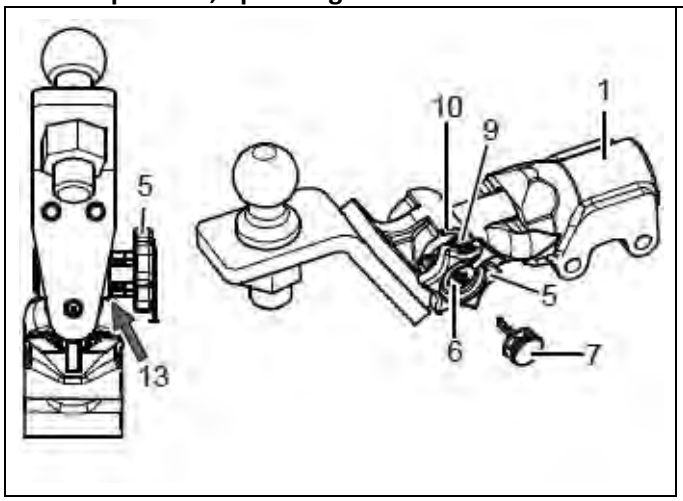

Unlocked position, ball bar not mounted

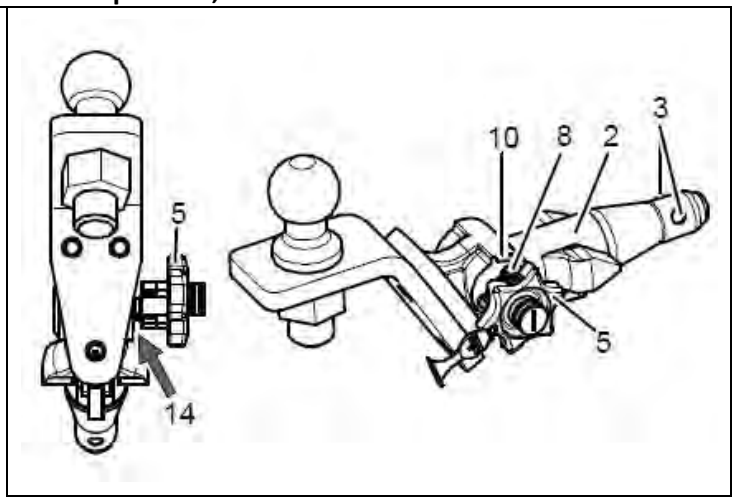

Installation of the ball bar:

1.) Remove the plug from the receiver.
The ball bar is usually in the unlocked position when it is removed from the boot of the vehicle. This is the case if there is a visible gap of approx. 5 mm between the handwheel and the ball bar (see diagram) and the red marking on the handwheel is aligned with the green marking on the ball bar.
Please note that the ball bar can only be inserted in this state!
If the locking mechanism of the ball bar has, for some reason, been disengaged before installation, i.e. the ball bar is in the locked position, the mechanism has to be pre-tensioned. The locked position is easily identifiable as the green marking on the handwheel is aligned with the green marking on the ball bar and there is no gap between the handwheel and the ball bar (see diagram).
Follow the instructions below to pre-tension the locking mechanism:
Insert key and open lock, extract the handwheel in the **direction of arrow a**, and turn it until the limit stop in the **direction of arrow b**. The release lever will then engage and, after the handwheel is released, the locking mechanism remains in the pre-tensioned position.
2.) Install the ball bar together with the stop pin by inserting and pushing both into the receiver.
The **locking operation** is performed **automatically** in this case. Always keep hands away from the handwheel because it rotates during the locking process.
3.) Close the lock and always remove the key. The key cannot be withdrawn if the lock is open! Press the cover **onto** the lock.

Removal of the ball bar:

1.) Pull the cover off the lock and press it onto the handle of the key.
Open the lock with the key.
2.) **Hold** the ball bar, extract the handwheel in the **direction of arrow a**, and turn it until the limit stop in the **direction of arrow b** in order to unlock it in the extracted position.
Remove the ball bar from the receiver.
The handwheel can now be released; it automatically engages in the unlocked position.
3.) Stow the ball bar in a safe place in the boot of the vehicle and protect it against dirt.
4.) Insert the plug into the receiver!

Notes!
Any repairs or dismantling of the detachable ball bar should only be carried out by the manufacturer.
Fix the enclosed information plate to the car close to the receiver or inside the boot where it is clearly visible.
Always keep the ball bar and the receiver clean to ensure proper operation.
Ensure regular servicing of the mechanical parts. Treat lock only with graphite.
Lubricate the bearing points, friction surfaces and balls with resin-free grease or oil. Grease and oil also function as additional protection against corrosion.
The ball bar has to be removed and the plug inserted when cleaning the car with a steam jet cleaner. The ball bar must not be cleaned with a steam cleaner.

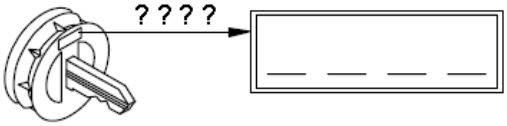

Important!
2 keys are issued with the detachable ball bar. Make a note of and keep the key number in case of repeat orders.

1	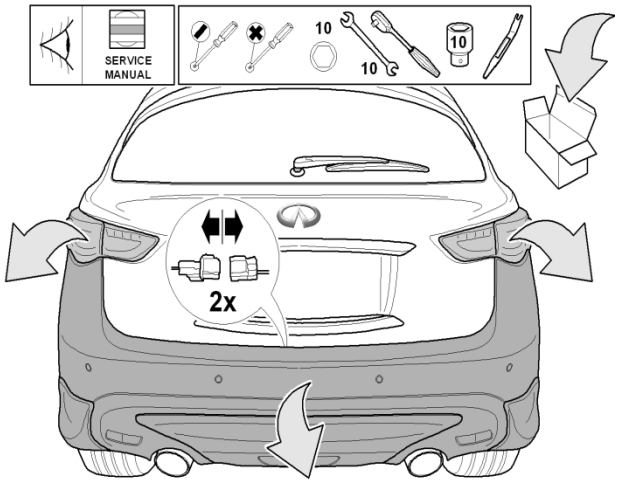	**Remove the rear bumper.**
2	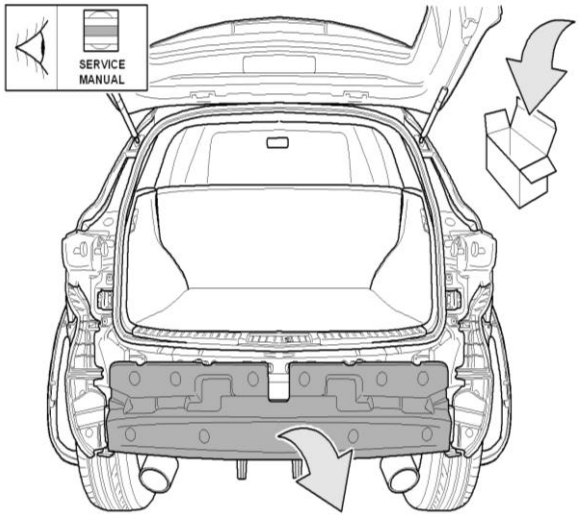	**Remove bumper re-enforcement and keep**
3	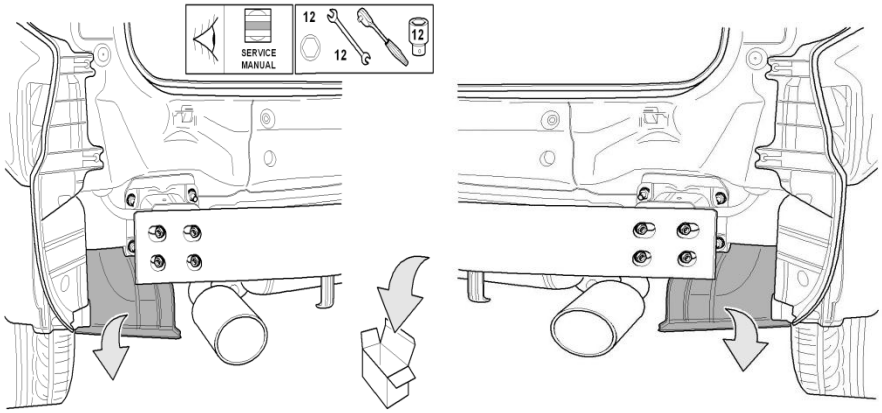	**Remove both LH and RH cover.**

4	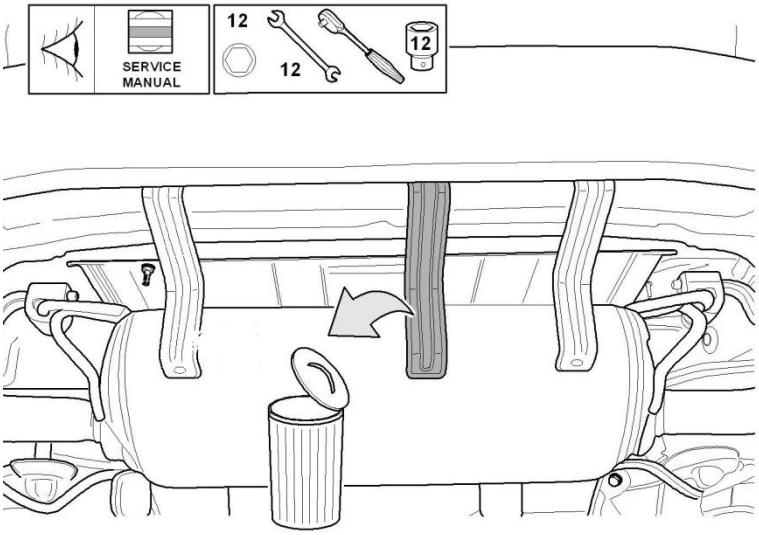	**Remove bumper stay (shaded grey) from impact frame and discard.**
5	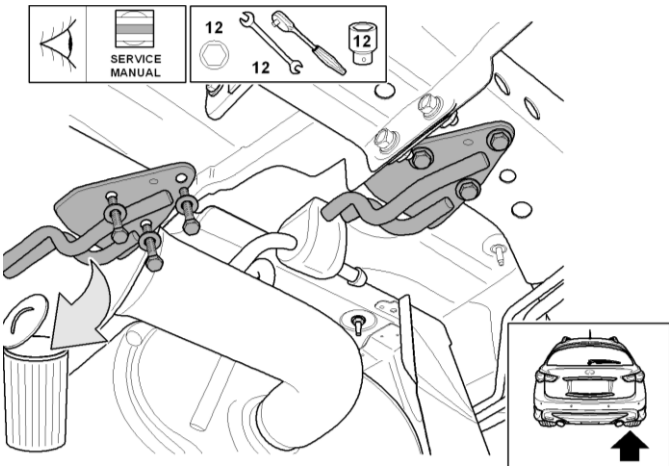	**Remove exhaust bracket and discard.**
6	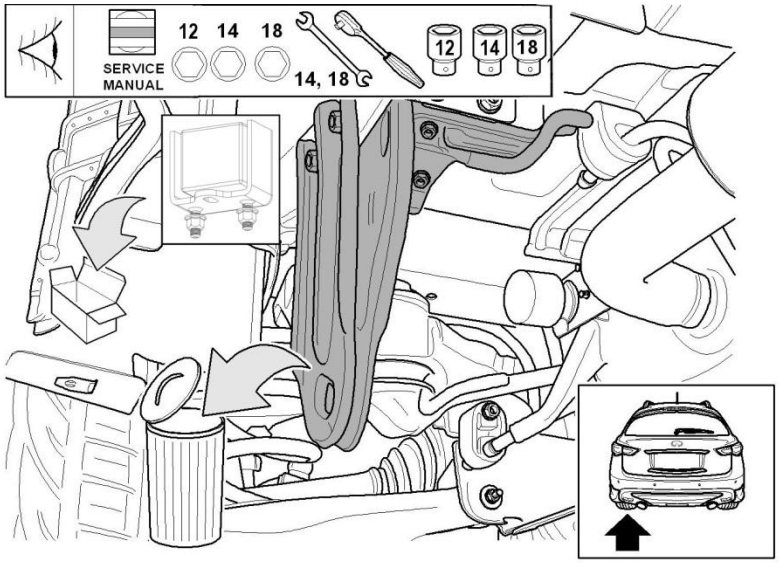	**Remove recovery hook and discard. *fig A*.Remove bump stop to allow easier removal of front M12 bolt.**

7	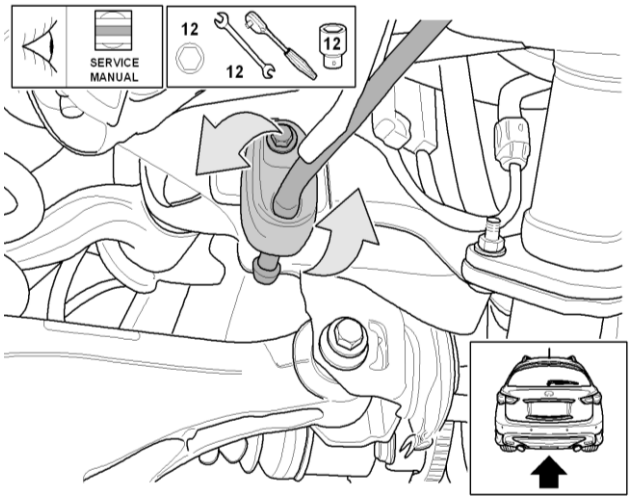	**Remove as shown and rotate exhaust rubbers x 3**
8	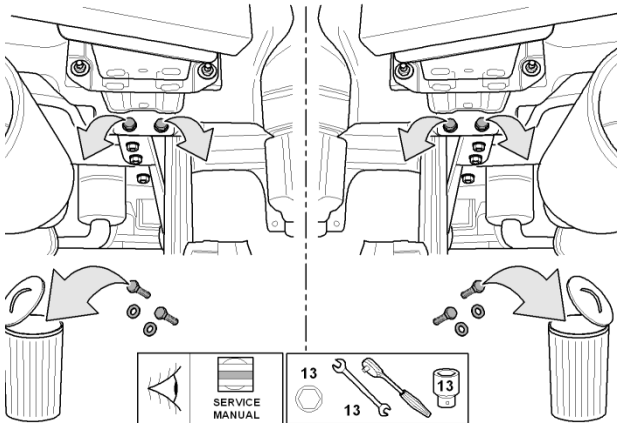	**Remove bolts and discard.**
9	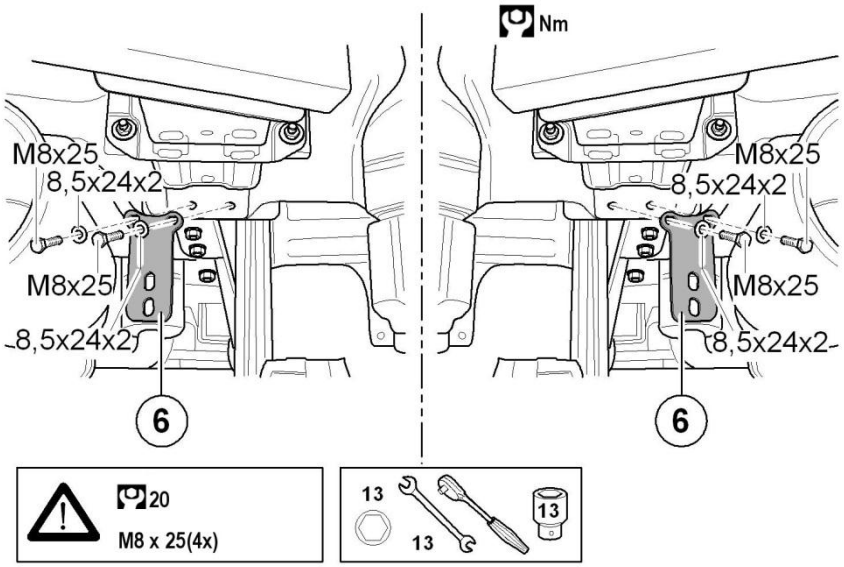	**Fit part 6.**

10	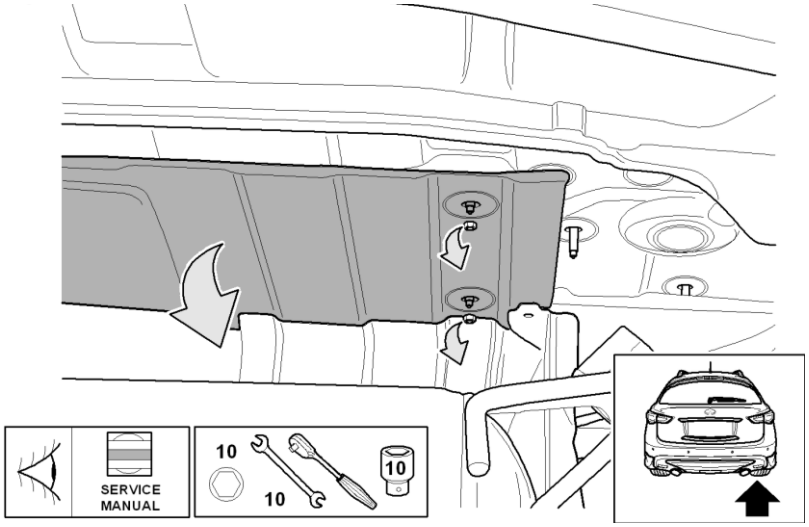	**Remove heat shield.**
11	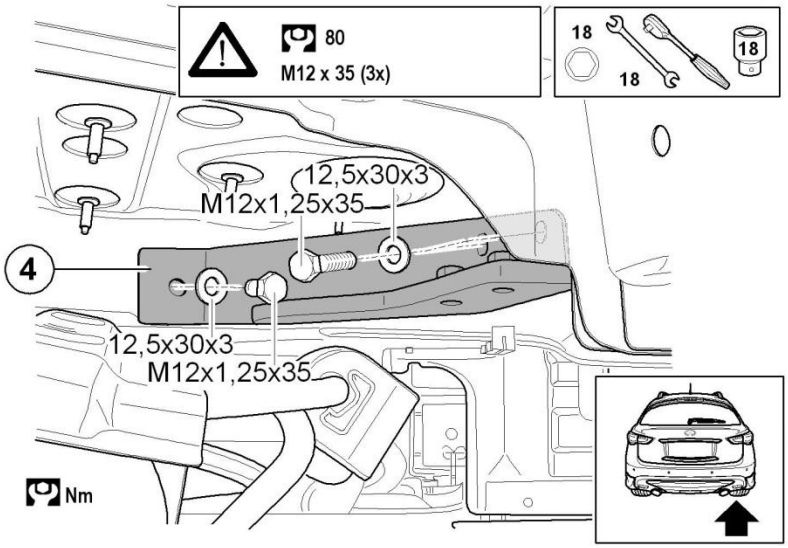	**Fit item 4.**
12	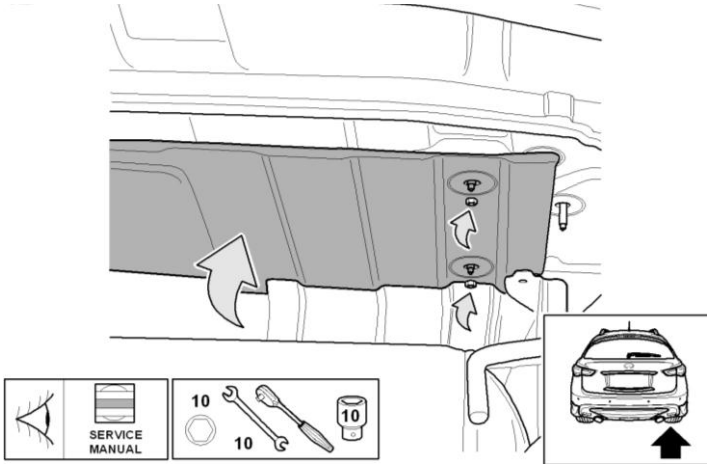	**Refit heat shield.**

13	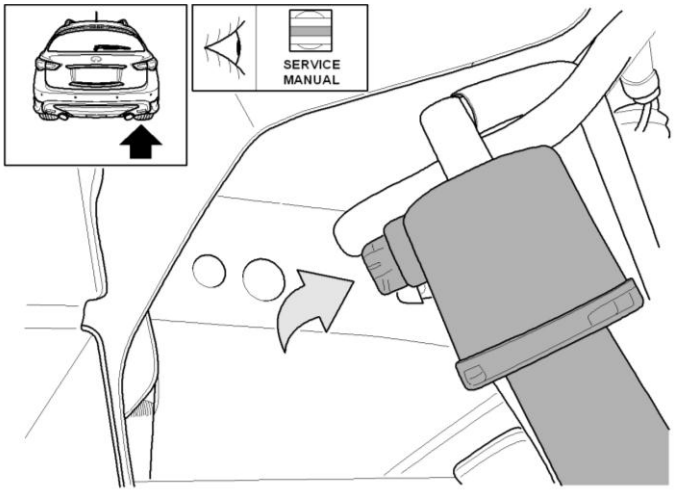	**Remove evaporative canister.**
14	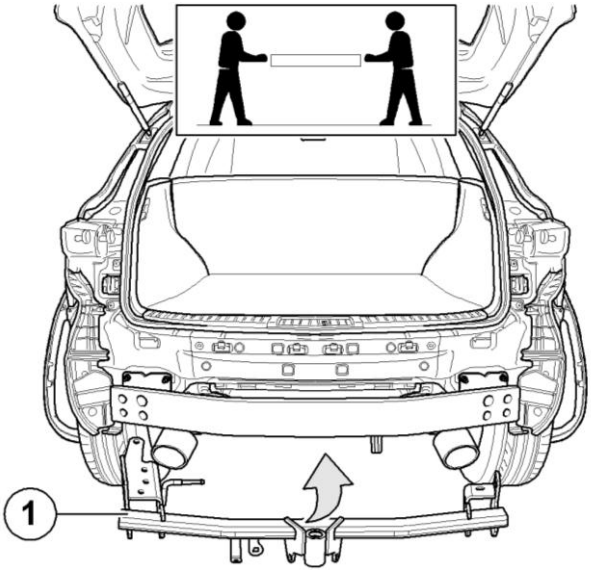	**Use two people to fit main beam.**
15	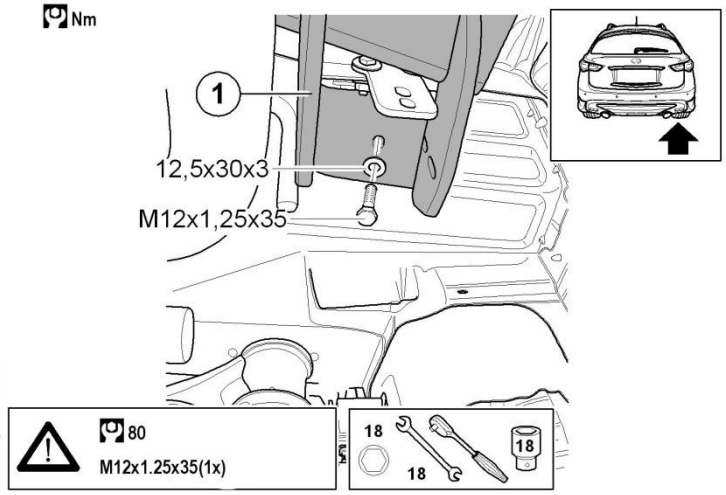	**Fit fastenings as shown.**

16	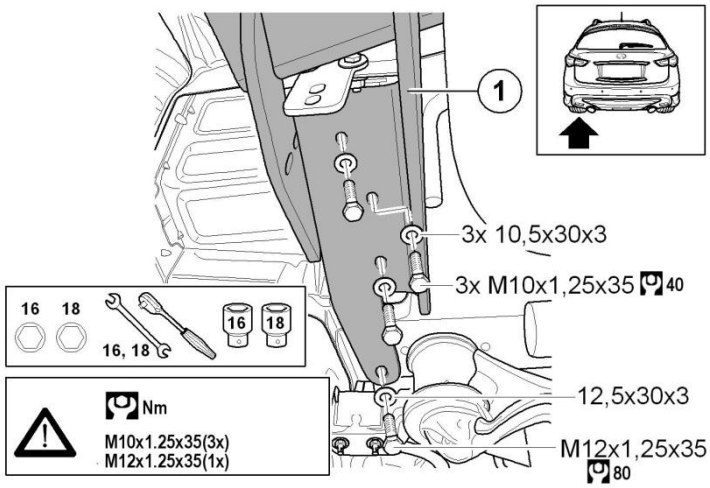	**Fit fastenings as shown.**
17	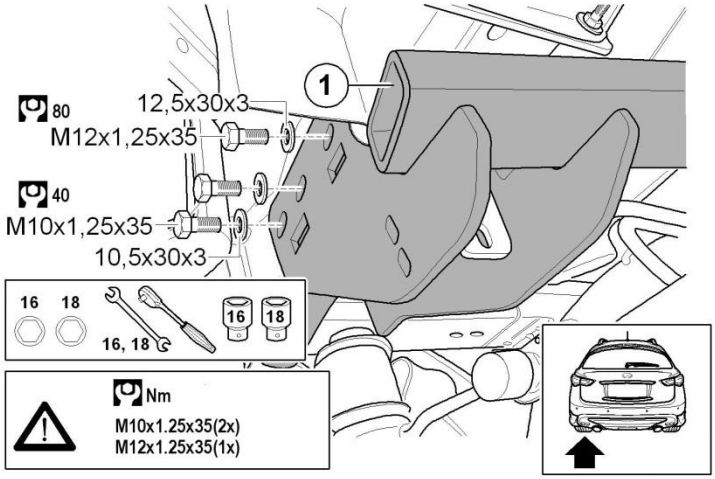	**Fit fastenings as shown.**
18	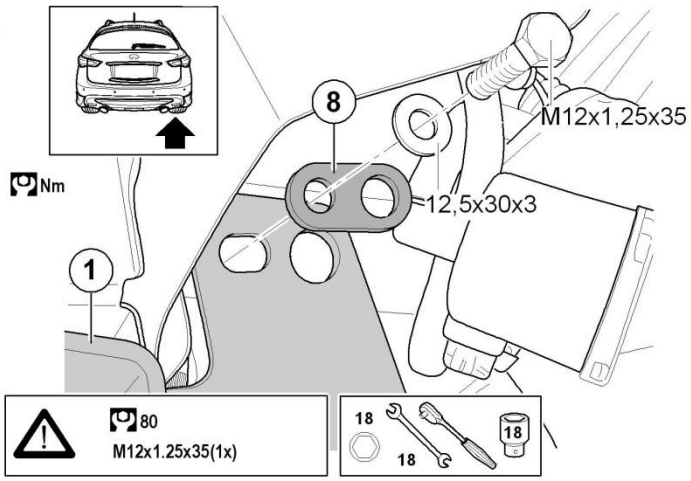	**Fit fastenings as shown.**

19	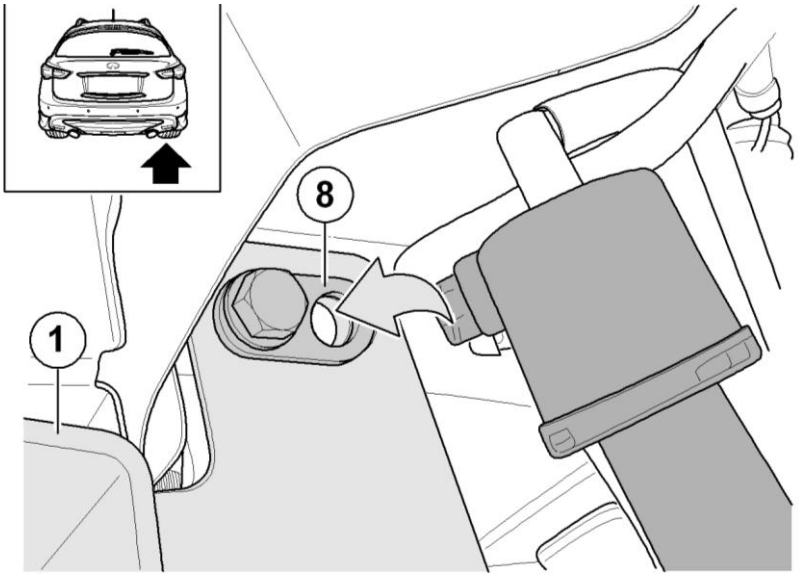	**Refit evaporative canister as shown.**
20	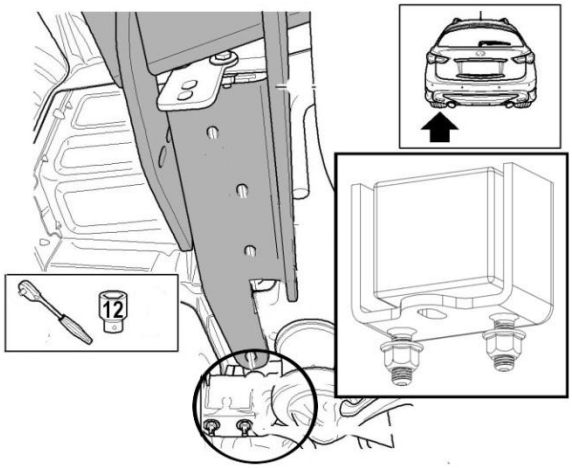	**Reinstall Rubber Bumpstop.**
21	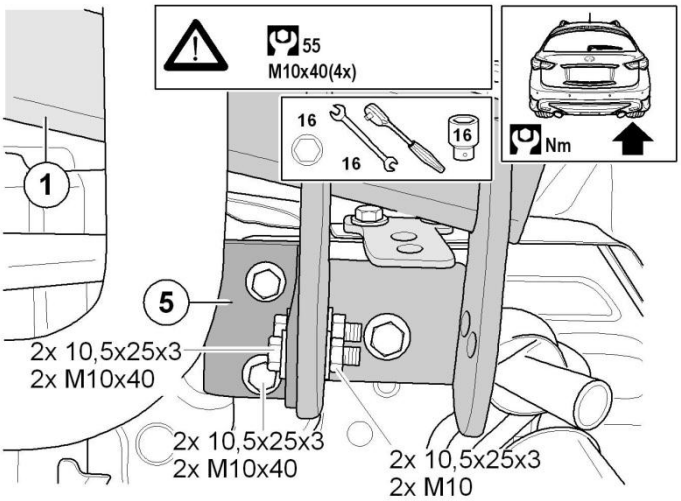	**Fit fastenings as shown.**

22	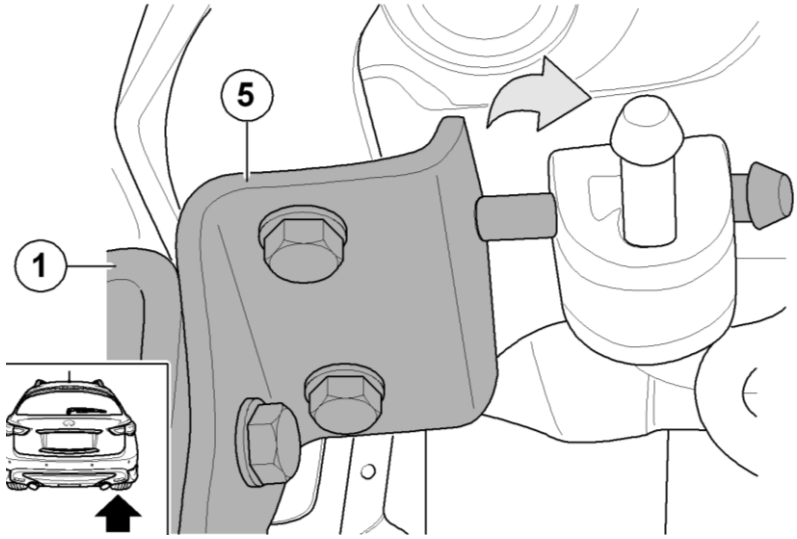	**Fit RH exhaust hanger and mount exhaust rubber.**
23	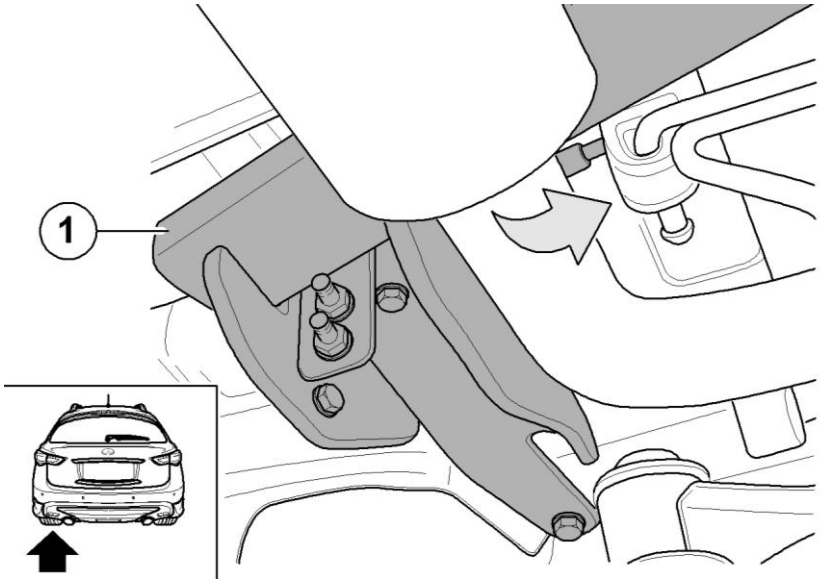	**Remount LH exhaust rubber.**
24	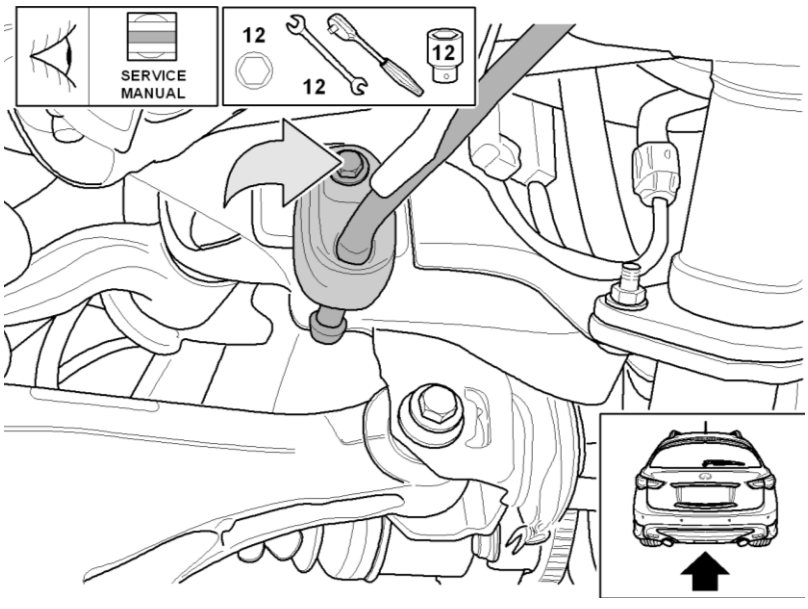	**Refit Exhaust Hangers (3x).**

25	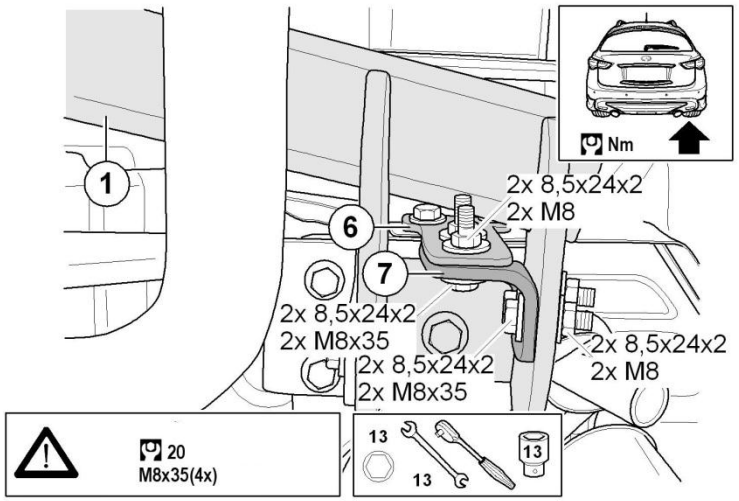	**Fit item 7 on RH side.**
26	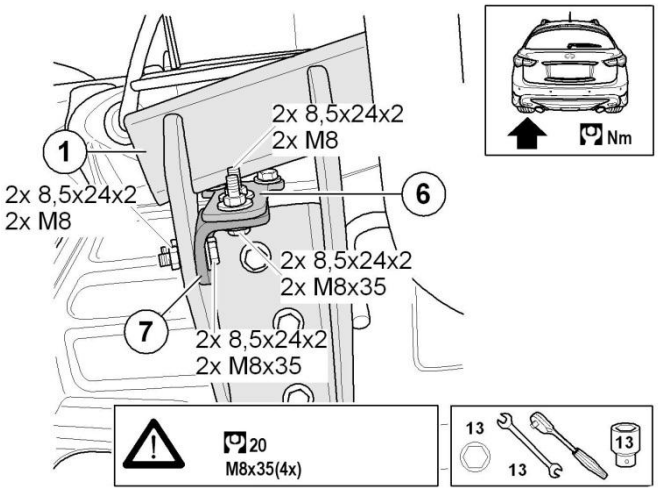	**Fit item 7 on LH side.**
27	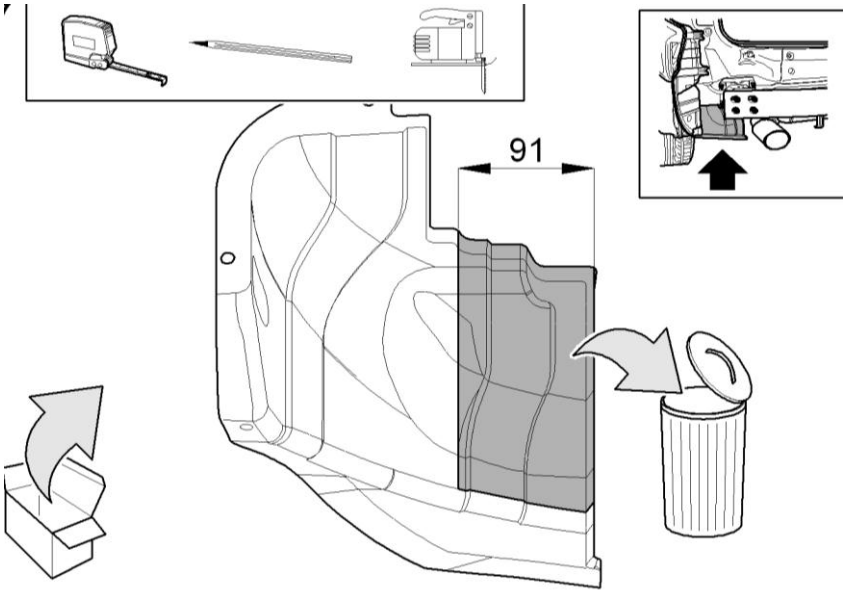	**Cut cover as shown. LH only.**

28	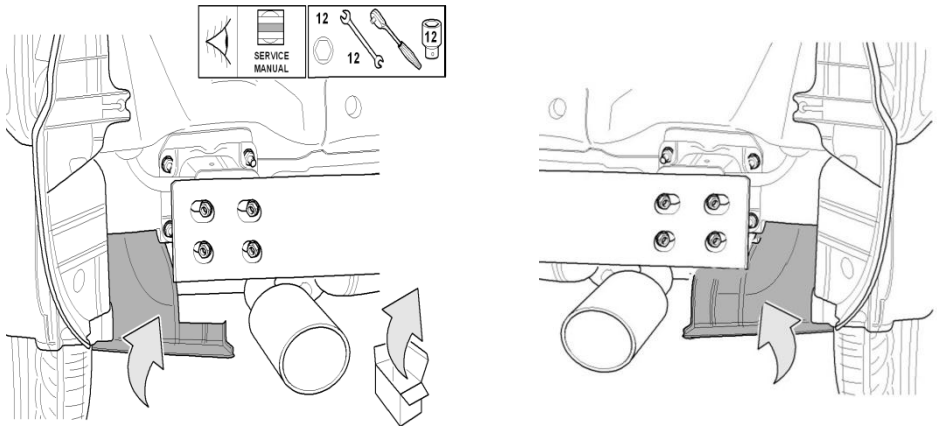	**Refit LH and RH cover.**
29	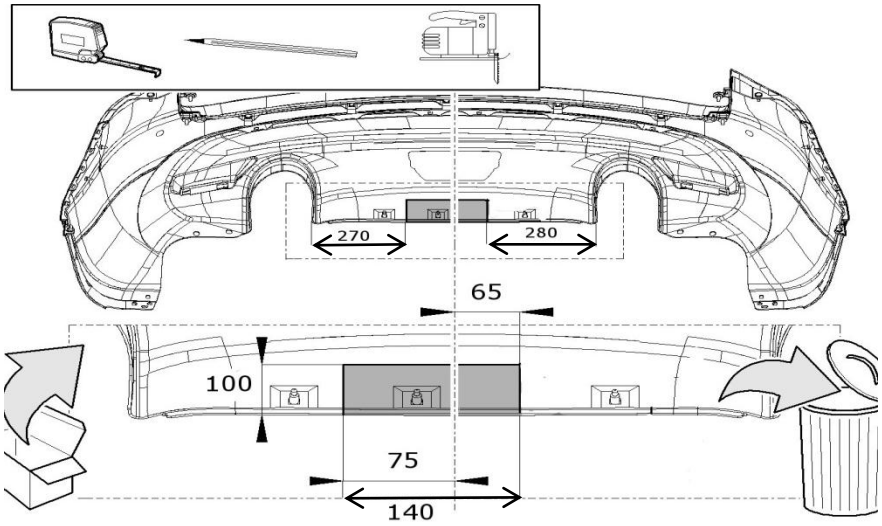	**Cut bumper as shown.**
30	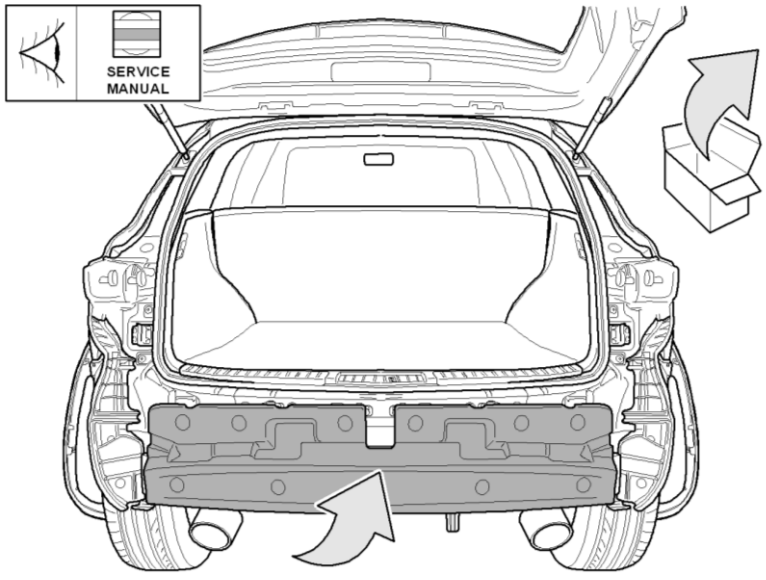	**Refit bumper support.**

31	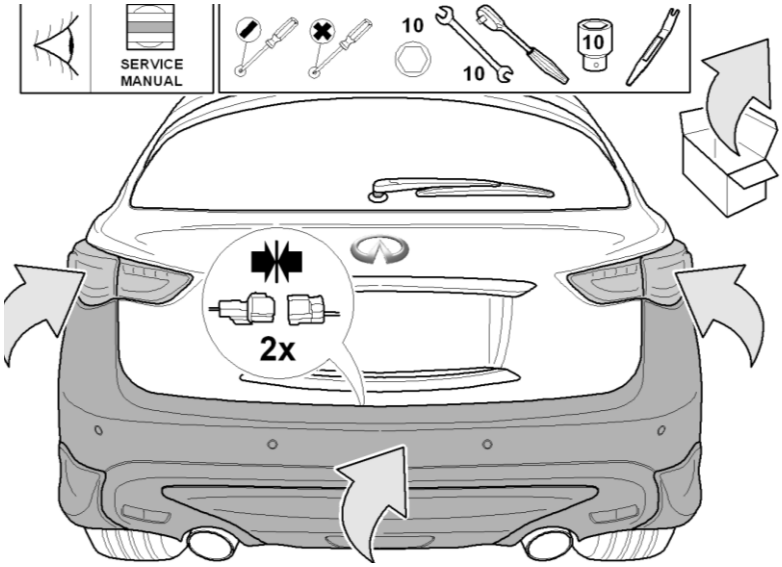	**Refit bumper.**
32	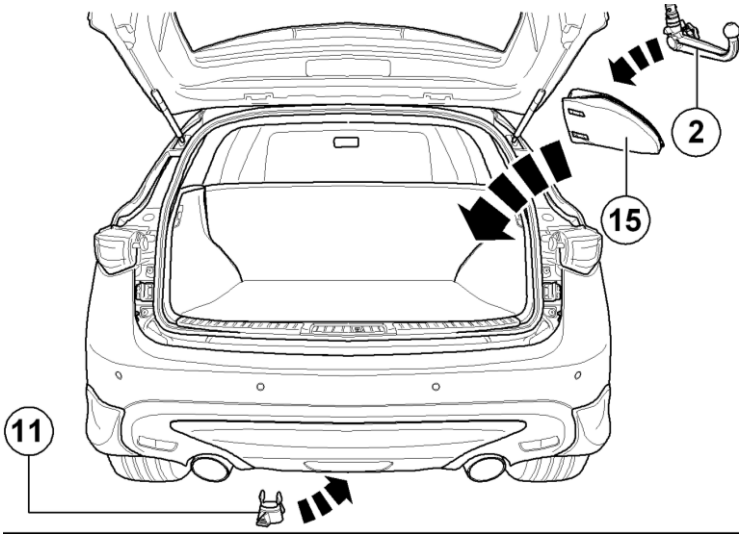	**Store detachable hitch on board car when not in use. Be sure to use dust cap provided when not in use to prevent malfunction of towing system.**
33	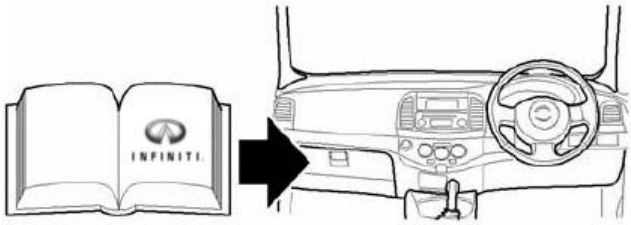 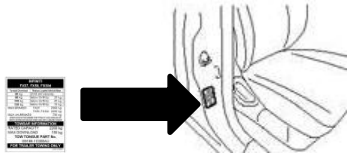	**Place these instructions in the vehicle's glove compartment with the owner's manual after installation is complete.** **Place load rating label (Item No.10) on driver's side B pillar.**