D **Montage- und Betriebsanleitung**

CZ **Montážní a provozní návod**

DK **Montage- og driftsvejledning**

E **Instrucciones de montaje y de servicio**

F **Notice de montage et d'utilisation**

FIN **Asennus- ja käyttöohjeet**

GB **Installation and Operating Instructions**

GR **Οδηγίες συναρμολόγησης και λειτουργίας**

I **Istruzioni di montaggio e per l'uso**

N **Monterings- og bruksanvisning**

NL **Montage- en gebruikshandleiding**

PL **Instrukcja montażu i eksploatacji**

S **Monterings- och bruksanvisning**

WESTFALIA

313 211
313 276
313 252

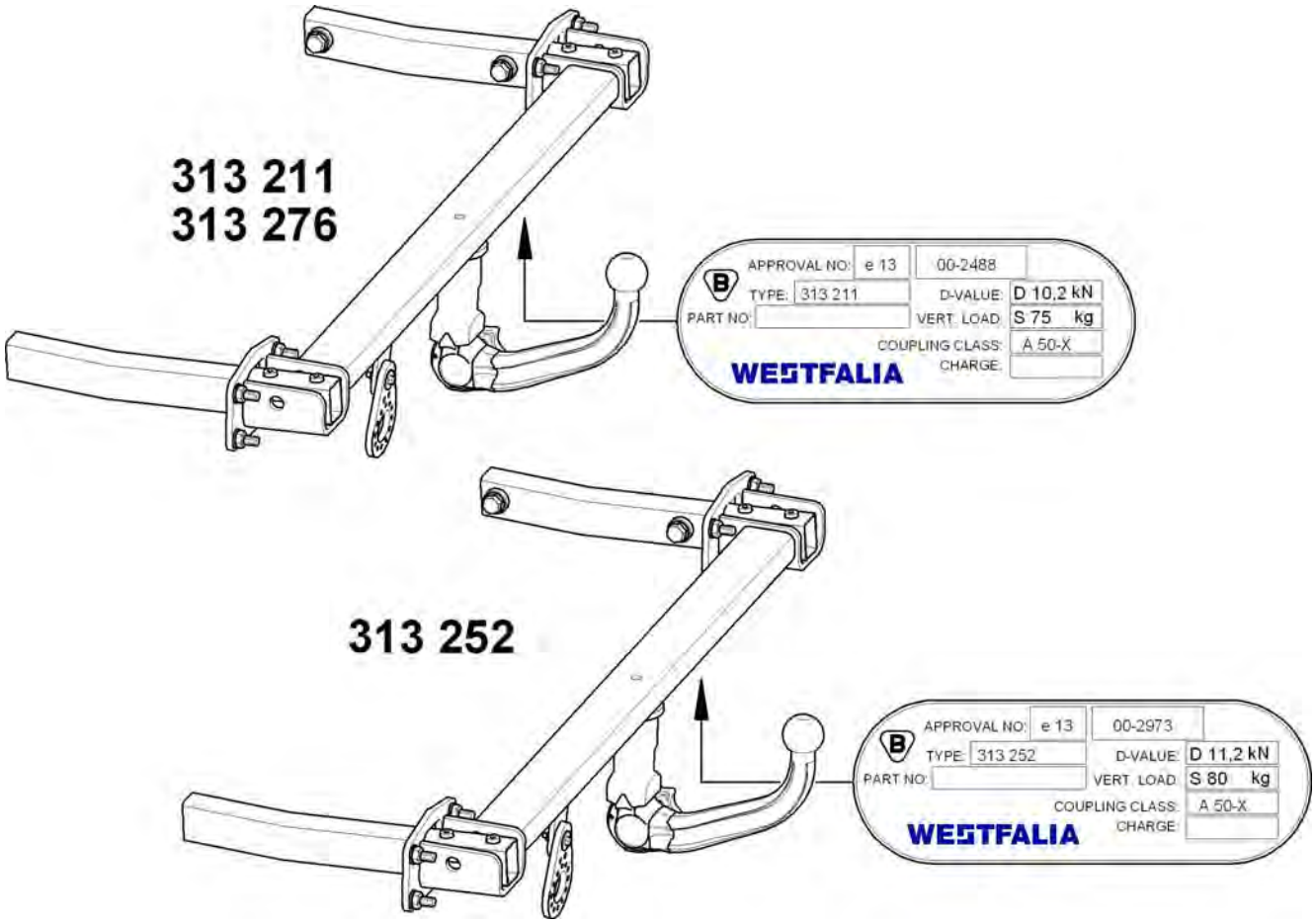

Westfalia-Automotive GmbH

313 211 691 101 - 006

Mercedes Benz C-Klasse Limousine & T- Modell (W/S204)
Mercedes Benz GLK (X204)
Mercedes Benz E-Cabrio & E-Coupé (A/C207)

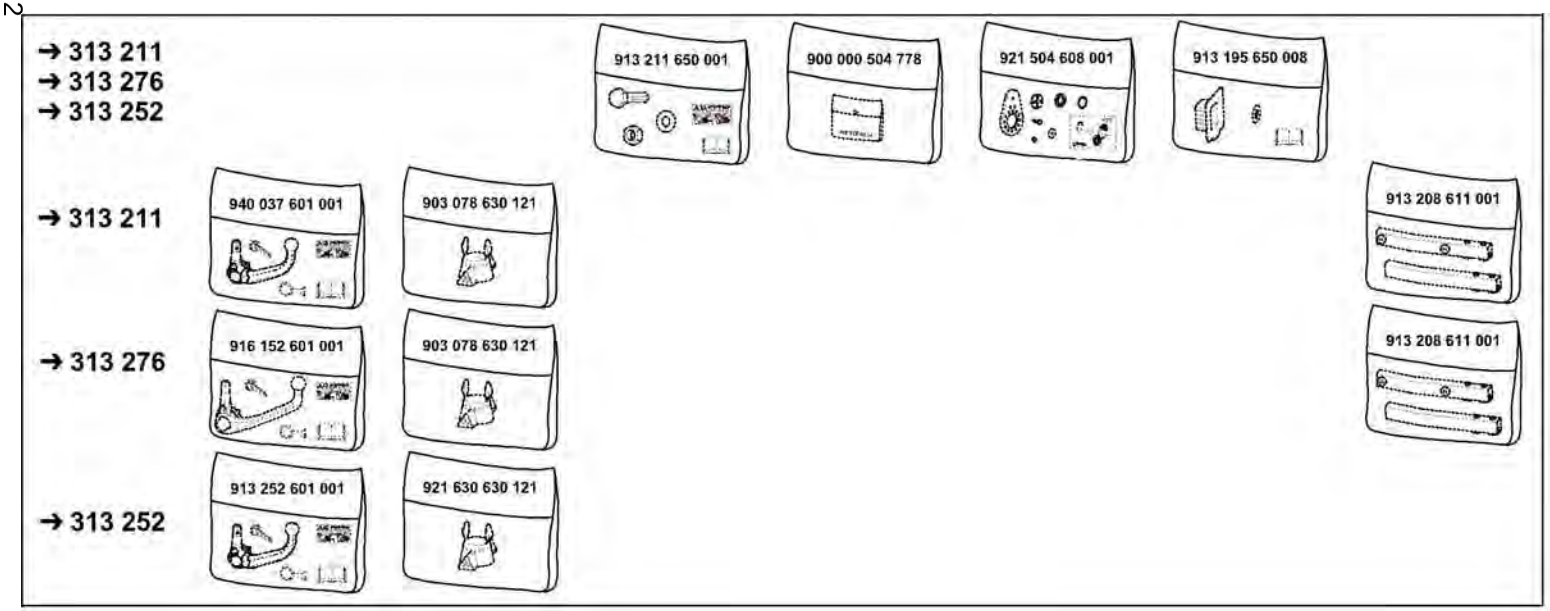



4x M12x1,5x40 (10.9)
8x M10x35 (10.9)
4x M10x30 (10.9)

4x 13x24x2,5
20x 10,5x30x2,5
8x 10,5x20x2
8x 15x26x0,1

8x M10 (10)

2x

1x

1x

1x

1x

1x

1x

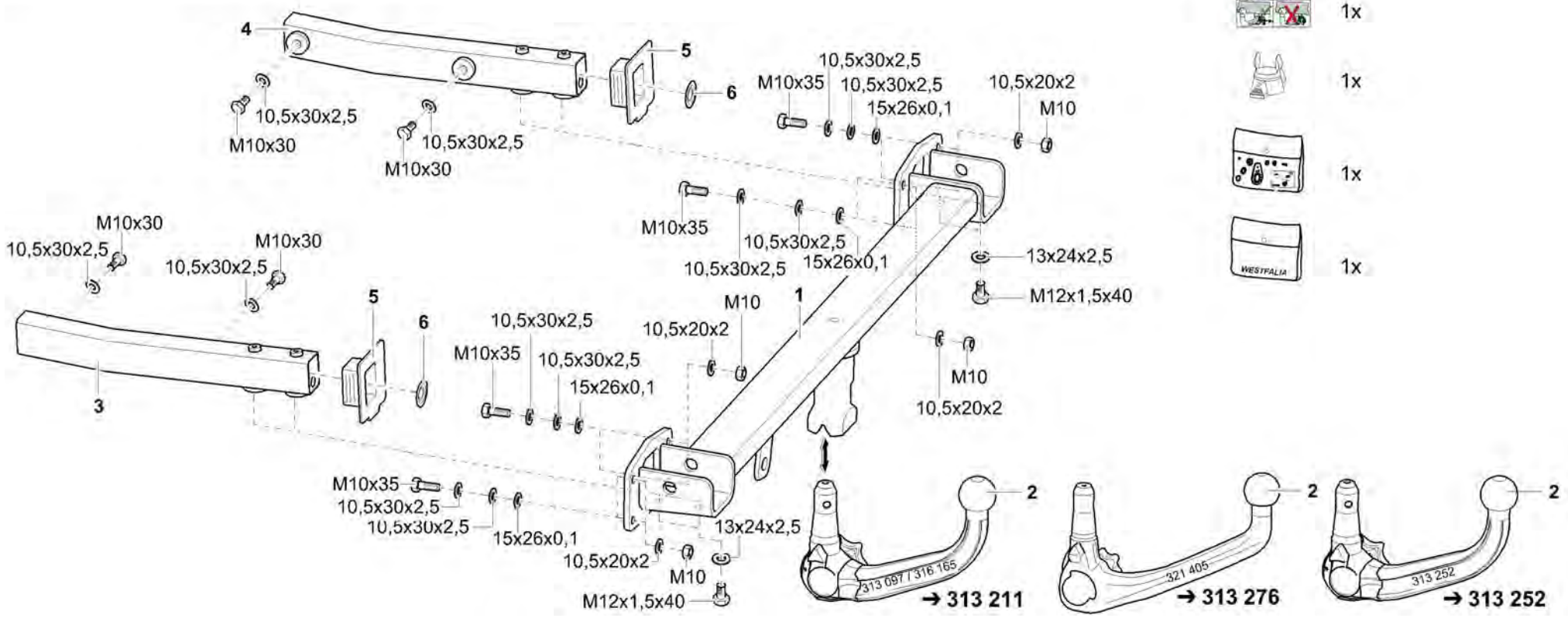

GB

Always observe national guidelines concerning official approval of extensions.
Any alteration and/or conversion of the tow bar is prohibited and will result in the cancellation of the type approval.
Remove insulating compound and/or underseal (if existing) from around the tow bar's mating surfaces on the vehicle.
The tow bar is designed for towing trailers fitted with ball couplings and for use with load bearing implements approved for attachment to the tow bar. Any use other than the one specified is prohibited.
If vehicles are fitted with a **Parking Distance Control (PDC)** system **malfunctioning** of the system can occur after tow bar installation since the parts (ball bar, ball coupling) could be located in the detection area of the sensors. In this case, the detection area should be readjusted or the PDC deactivated. Malfunctioning is not expected when using tow bars with detachable or pivoted ball bars if the ball bar is removed from its operating position. Subject to alteration.

GR

Πρέπει να τηρούνται οι κρατικοί κανονισμοί σχετικά με τον έλεγχο προσθηκών στα αμαξώματα.
Απαγορεύεται κάθε αλλαγή ή μετατροπή στη διάταξη ζεύξης. Συνεπάγεται η ακύρωση της άδειας λειτουργίας.
Αφαιρέστε το μονωτικό στρώμα ή το προστατευτικό στρώμα από κάτω από το όχημα – εάν υπάρχει – στην περιοχή επαφής της διάταξη ζεύξης.
Η διάταξη ζεύξης χρησιμοποιείται για την έλξη ρυμούλκας, η οποία είναι εξοπλισμένη με κατάλληλο σφαιρικό σύνδεσμο, και για την λειτουργία διατάξεων μεταφοράς φορτίων, οι οποίες έχουν έγκριση για στήριξη πάνω σε σφαιρικές ζεύξεις. Απαγορεύεται κάθε άλλη χρήση.
Σε οχήματα με **αυτόματο σύστημα στάθμευσης** μπορεί να προκύψουν μετά από το μοντάρισμα της διάταξης ρυμούλκησης **προβλήματα της λειτουργίας του**, επειδή ενδεχομένως εξαρτήματά της (η ράβδος σφαίρας, η σφαίρα ζεύξης) βρίσκονται στην περιοχή ανίχνευσης εμποδίων των αισθητήρων. Σε αυτή την περίπτωση να προσαρμοστεί η περιοχή ανίχνευσης εμποδίων ή να απενεργοποιηθεί το αυτόματο σύστημα στάθμευσης. Εφόσον πρόκειται για μια διάταξη ρυμούλκησης με αφαιρούμενη ή περιστρεφόμενη σφαίρα ζεύξης δεν πρέπει να υπάρχουν προβλήματα λειτουργίας όταν η σφαίρα ζεύξης δεν βρίσκεται στη θέση λειτουργίας. Με την επιφύλαξη τεχνικών αλλαγών.

I

Devono essere osservate le normative nazionali sui collaudi di dispositivi annessi.
Qualsiasi modifica costruttiva del gancio di traino è vietata e comporta l'invalidamento dell'omologazione del ministero dei trasporti.
Eliminare l'isolante o la protezione sottoscocca eventualmente presente sulla vettura nella zona delle superfici di appoggio del gancio di traino.
Il gancio di traino serve per trainare dei rimorchi dotati di attacchi sferici, nonché per essere utilizzato con portacarichi omologati per il montaggio su gancio di traino a sfera. Qualsiasi altro uso è vietato.
Nei veicoli equipaggiati con **assistente al parcheggio**, in seguito al montaggio del gancio di traino possono apparire segnalazioni di **malfunzionamento**, in quanto alcune parti (barra di traino, gancio di traino a sfera) potrebbero trovarsi entro il campo di rilevazione dei sensori. In tal caso occorre regolare il campo di rilevazione oppure disattivare la funzione assistente al parcheggio. Qualora si utilizzi un gancio di traino con barra a testa sferica amovibile o orientabile è da escludere il verificarsi di qualsiasi segnalazione di malfunzionamento se la barra di traino viene estratta dalla posizione di funzionamento. Con riserva di modifiche.

N

Nasjonale retningslinjer om godkjennelse av monteringer skal overholdes.
Enhver endring hhv. ombygging av tilhengerfestet er forbudt. De medfører at driftstillatelsen opphører.
Isolermasse hhv. understellsbeskyttelse på bilen - hvis det finnes - i området for bæreflatene på tilhengerfestet skal **fjernes**.
Tilhengerfestet tjener til å trekke tilhengere som er utstyrt med kulekoplinger og for drift av lastbærere som er godkjent for montering på koplingskulen. Annen bruk er forbudt.
På kjøretøy med **parkeringshjelpsystem** kan det oppstå **feilfunksjon** i systemet når tilhengerfestet er montert, ettersom enkelte deler (kulestang, koplingskule) kan befinne seg innenfor følernes registreringsområde. I slike tilfeller må følernes registreringsområde tilpasses eller parkeringshjelpsystemet deaktiveres. Ved bruk av tilhengerfeste med avtakbar eller dreibar kulestang vil en ev. feilfunksjon opphøre når kulestangen fjernes fra driftsstillingen. Endringer forbeholdes.

NL

Nationale richtlijnen betreffende de montagegoedkeuring moeten in acht worden genomen.
Elke wijziging c.q. aanpassing aan de trekhaak is ontoelaatbaar en heeft bovendien het vervallen van de typegoedkeuring ten gevolge.
Isolatiemassa resp. bodembescherming aan het voertuig - indien aanwezig - in de buurt van de steunvlakken van de trekhaak **verwijderen**.
De trekhaak is bedoeld voor het trekken van aanhangwagens, die met trekkogelkoppen uitgerust zijn en voor het gebruik van lastdragers die voor montage op de trekhaak goedgekeurd zijn. Het gebruik voor hiervan afwijkende doeleinden is niet toegestaan.
Bij auto's met **parkeerassistent** kunnen er na het monteren van de trekhaak **storingen** optreden, omdat onderdelen (kogelstang, koppelkogel) binnen het waarnemingsbereik van de sensoren kunnen liggen. In dit geval moet u het waarnemingsbereik veranderen of de parkeerassistent buiten werking stellen. Bij gebruikmaking van trekhaken met afneembare c.q. draaibare kogelstangen zijn er geen storingen te verwachten, als u de kogelstang uit zijn functiepositie haalt. Wijzigingen voorbehouden.

D

Bitte vor der Montage unbedingt die Hinweise in der Bedienungsanleitung des Fahrzeuges beachten.
Werden genannte Komponenten nicht nachgerüstet, führt dies zum Erlöschen der Garantie / Kulanz.
Befragen Sie hierzu bitte Ihre Mercedes Benz Niederlassung.

CZ

Před montáží věnujte prosím bezpodmínečně pozornost pokynům v návodu k obsluze vozidla.
Pokud uvedené komponenty nebudou dodatečně montovány, zanikají podmínky pro záruku/kulanci.
Konzultujte prosím Vaši pobočku fy Mercedes Benz.

DK

Se altid henvisningerne i betjeningsvejledningen til køretøjet før montagearbejde.
Hvis de nævnte komponenter ikke monteres, bortfalder garantien.
Kontakt din Mercedes-Benz-filial for nærmere oplysninger.

E

Por favor, antes del montaje atienda expresamente las indicaciones del manual de instrucciones de servicio del vehículo.
Si no se reequipan los componentes citados, ello hará que se extinga la garantía / indemnización.
Sírvase consultar al respecto a su concesionario Mercedes Benz.

F

Veuillez suivre les instructions du manuel d'utilisation accompagnant le véhicule avant de procéder au montage.
La non-installation des éléments indiqués ci-dessus annulera toute garantie / obligation de dédommagement.
Pour de plus amples informations, prière de consulter votre concessionnaire Mercedes Benz.

FIN

Katso ja seuraa ehdottomasti ajoneuvon käyttöohjeessa mainittuja ohjeita.
Jos kyseisiä osia ei asenneta, takuu / korvausvelvollisuus raukeaa.
Kysy tarkempia ohjeita Mercedes Benz -edustajaltasi.

GB

Be sure to observe the instructions in vehicle's operating manual before starting with the assembly.
If the above mentioned parts are not retrofitted, then the guarantee / amiability expires.
Check with your Mercedes Benz representative on this.

GR

Πριν από την συναρμολόγηση θα πρέπει οπωσδήποτε να μελετήσετε τις οδηγίες στο εγχειρίδιο λειτουργίας του οχήματος.
Αν δεν γίνει εγκατάσταση των αναφερθέντων εξαρτημάτων, η εγγύηση παύει να ισχύει.
Απευθυνθείτε σχετικά στην αντιπροσωπεία της Mercedes Benz.

I

Prima del montaggio osservare assolutamente le avvertenze contenute nelle istruzioni per l'uso del veicolo.
Se non vengono applicati tali componenti, la garanzia / le prestazioni di favore a discrezione del produttore non sono più valide.
Rivolgersi al proprio concessionario Mercedes Benz.

N

Det er tvingende nødvendig å ta hensyn til instruksjonene i bruksanvisningen for bilen før montering.
Hvis de nevnte komponentene ikke monteres, fører det til tap av garanti / kulans.
Spør din Mercedes Benz forhandler om dette.

NL

Voor de montage altijd de aanwijzingen in de gebruiksaanwijzing van het voertuig in acht nemen.
Als de bovengenoemde componenten niet worden ingebouwd, leidt dit tot garantieverlies.
Neem hierover contact op met uw Mecedes Benz filiaal.

PL

Przed montażem prosimy koniecznie przestrzegać wskazówki w instrukcji obsługi pojazdu.
Brak wymienionych części powoduje utratę uprawnień wynikających z gwarancji.
Dalsze informacje uzyskać można w przedstawicielstwie Mercedes Benz.

S

Observera anvisningarna i fordonets bruksanvisning innan monteringen påbörjas.
Om nämnda komponenter inte monteras bortfaller garantin.
Kontakta din Mercedes Benz-filial för närmare upplysningar.

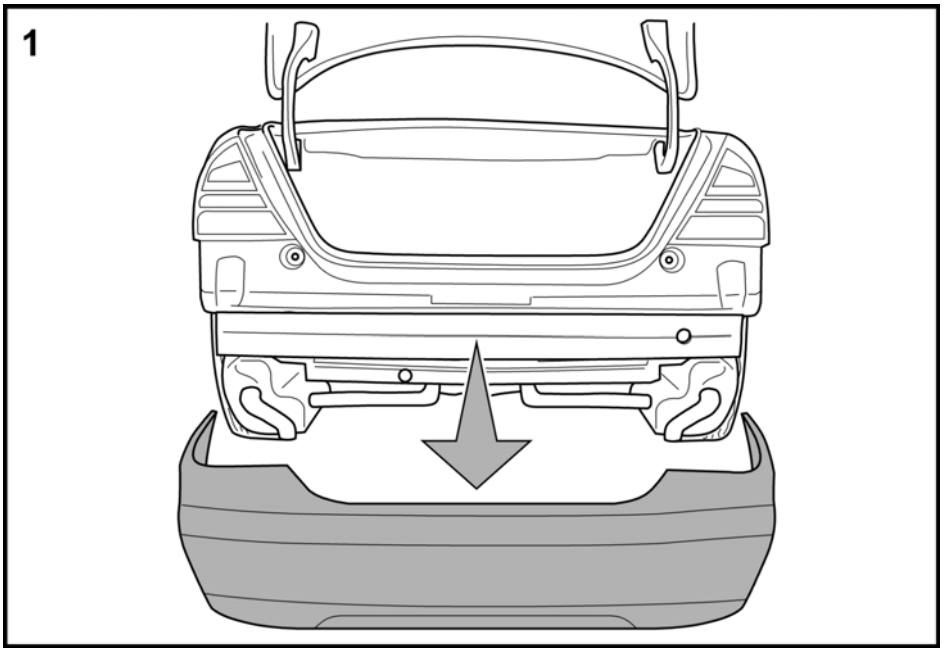
1

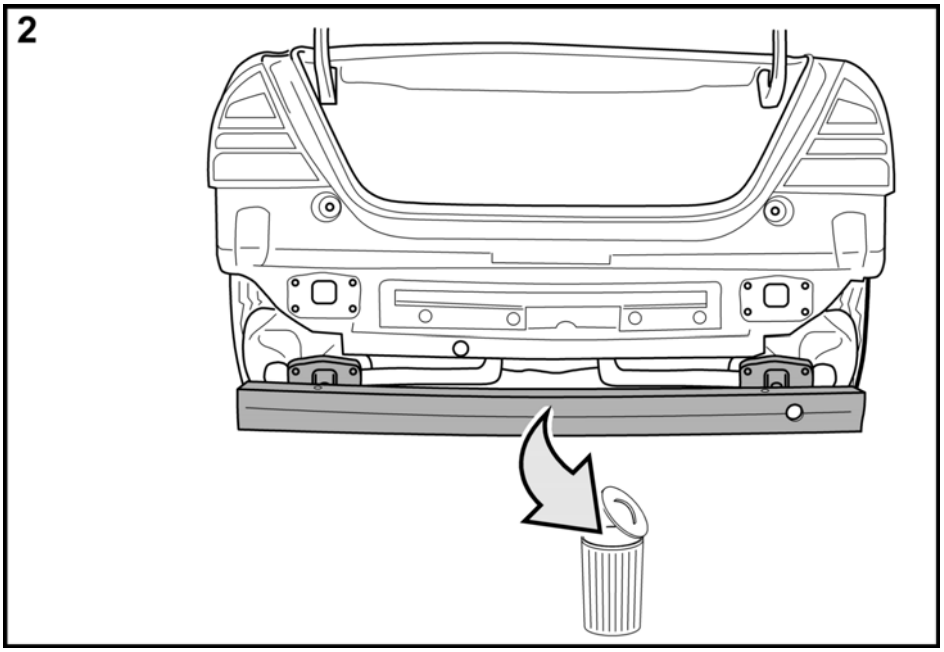
2

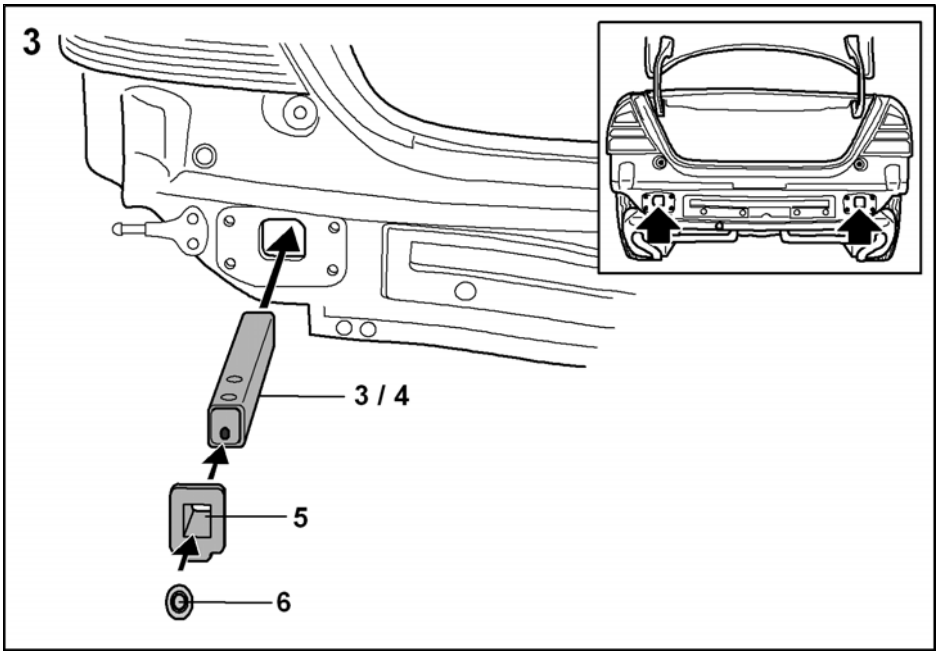
3
3 / 4
5
6

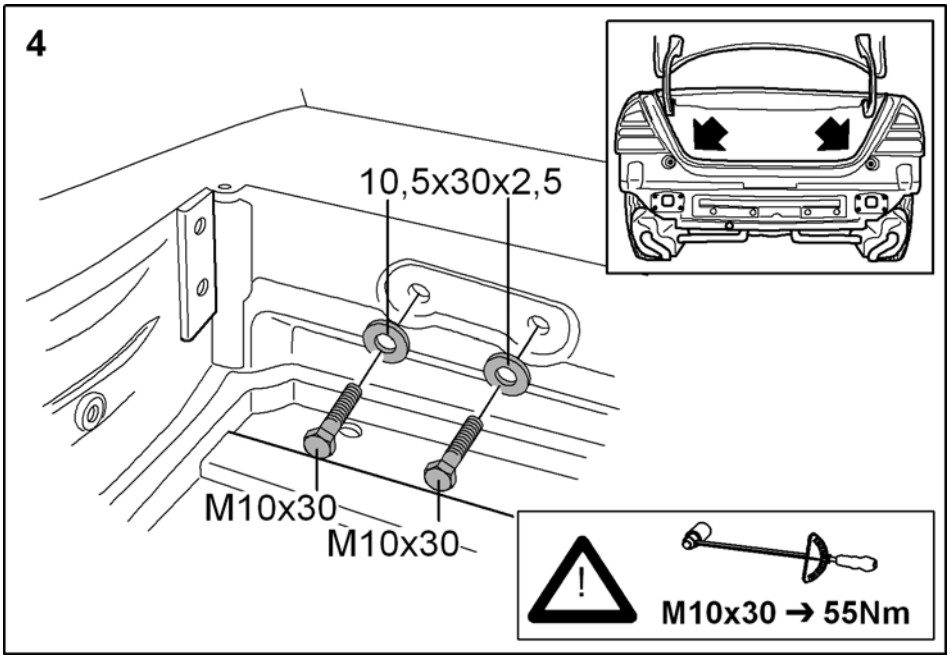
4
10,5x30x2,5
M10x30
M10x30
M10x30 → 55Nm

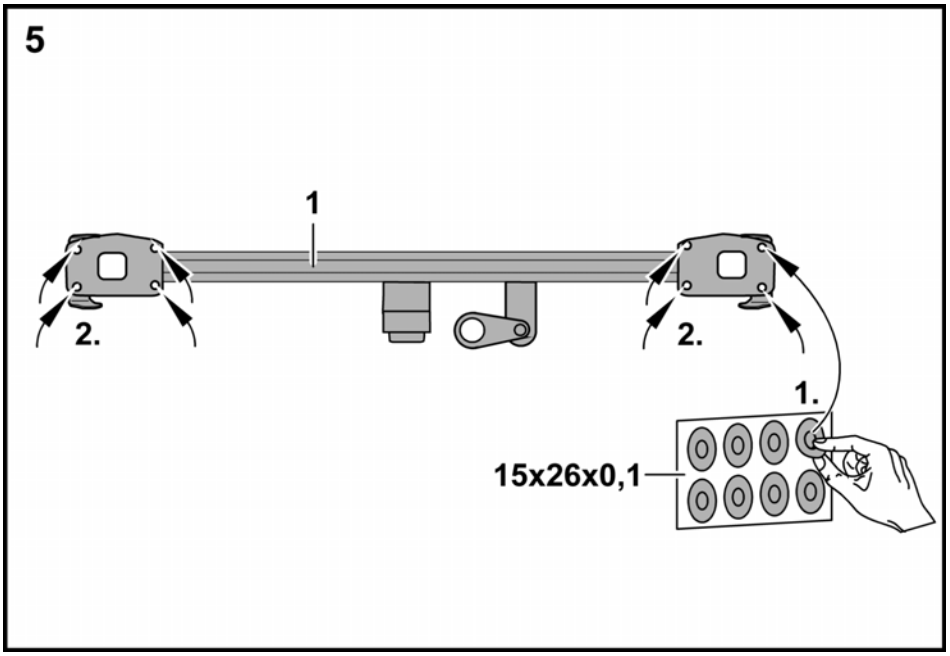
5
1
2.
2.
1.
15x26x0,1

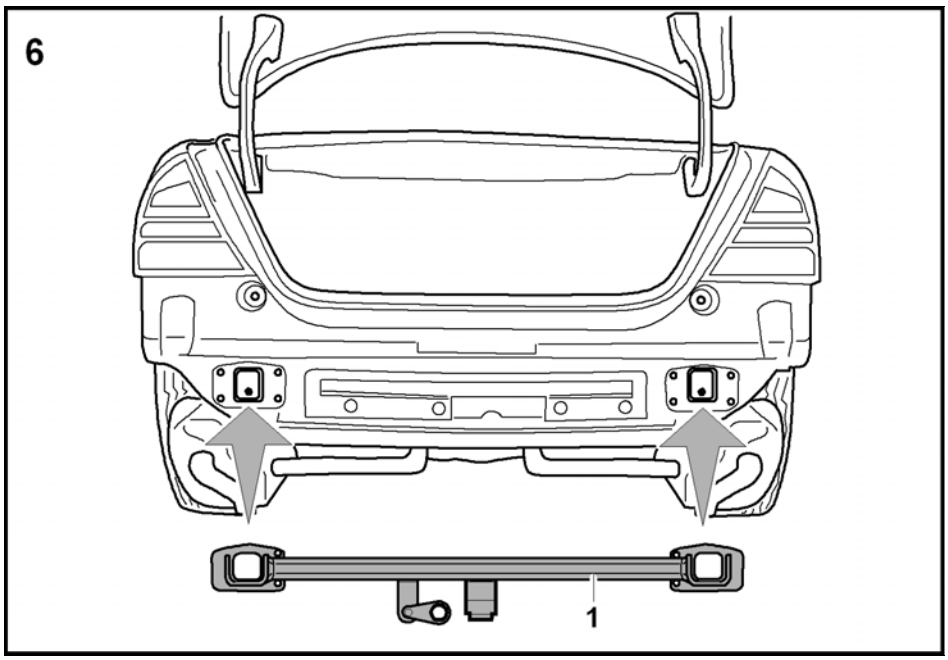
6
1

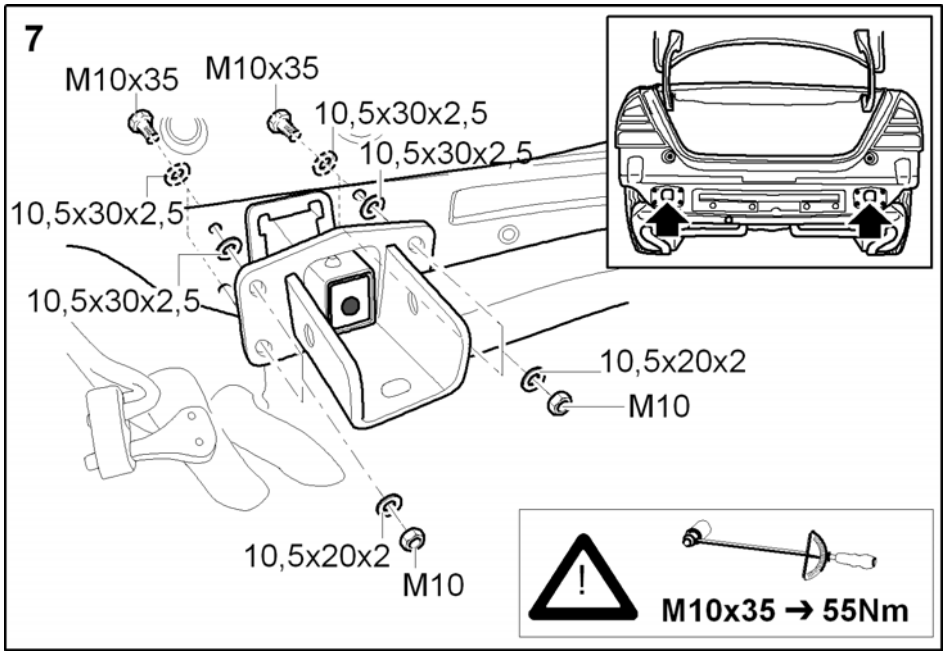
7
M10x35
M10x35
10,5x30x2,5
10,5x30x2,5
10,5x30x2,5
10,5x30x2,5
10,5x20x2
M10
10,5x20x2
M10
M10x35 → 55Nm

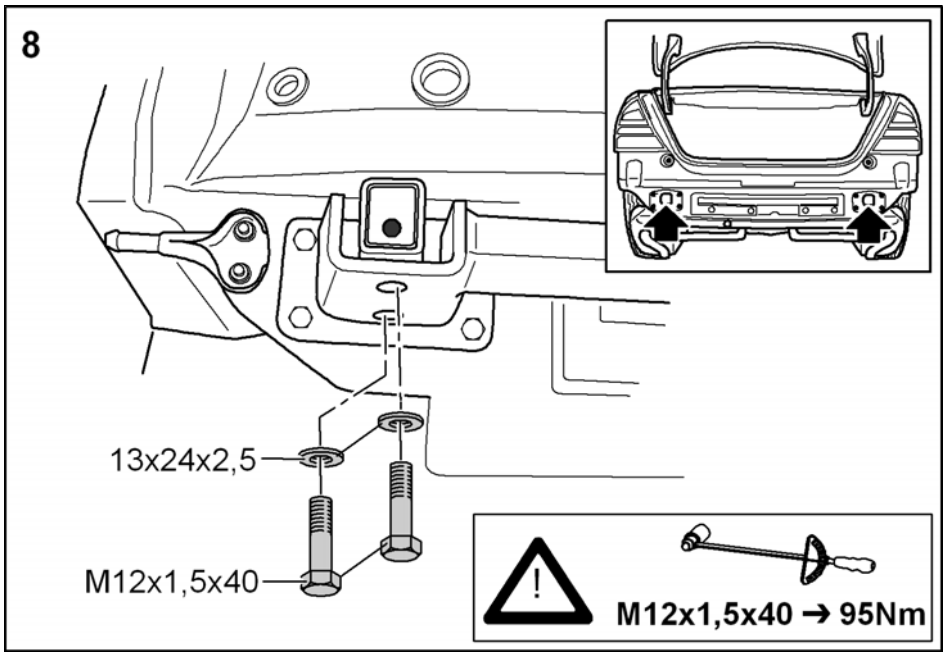
8
13x24x2,5
M12x1,5x40
M12x1,5x40 → 95Nm

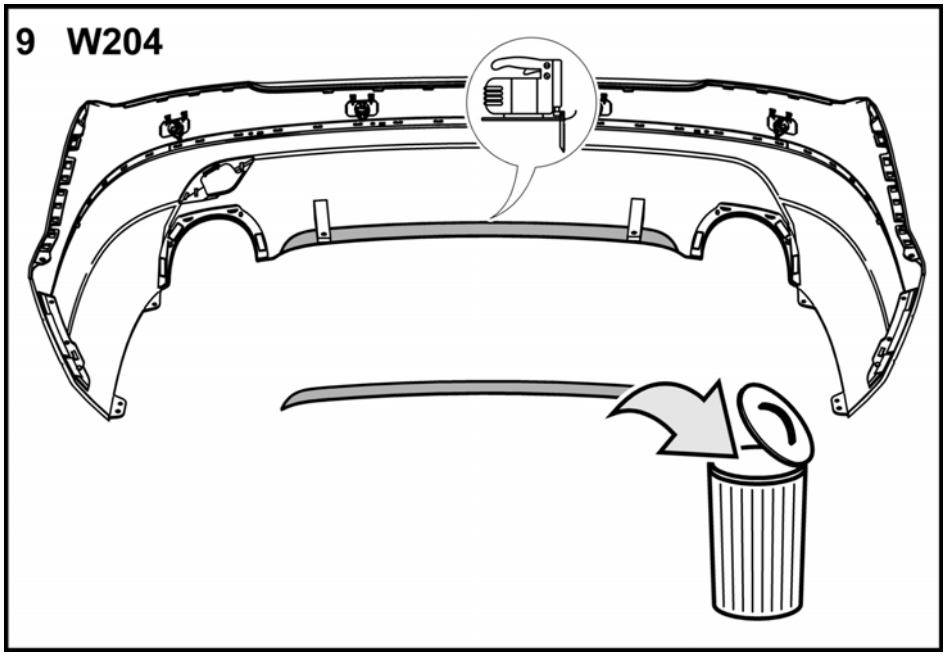
9 W204

10 S204

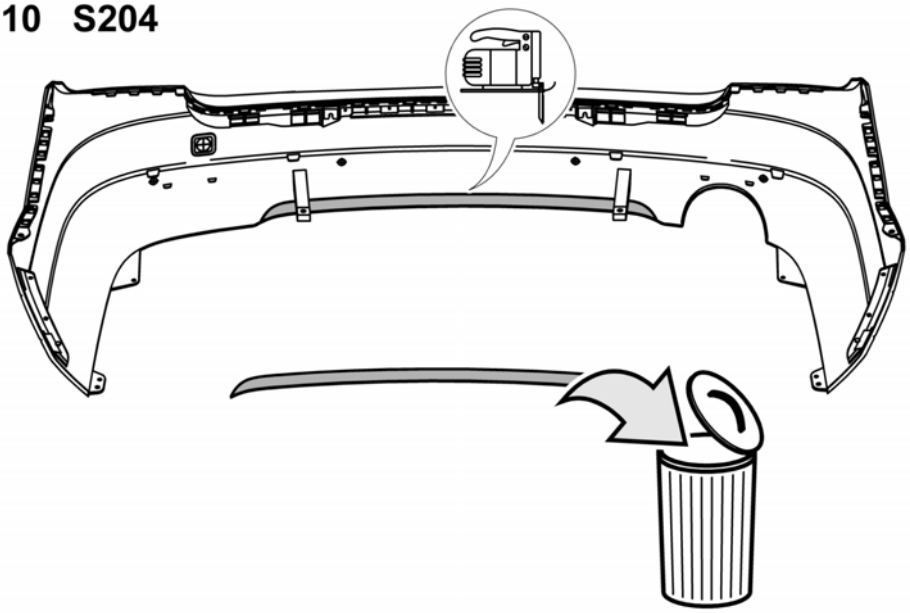

11 X204

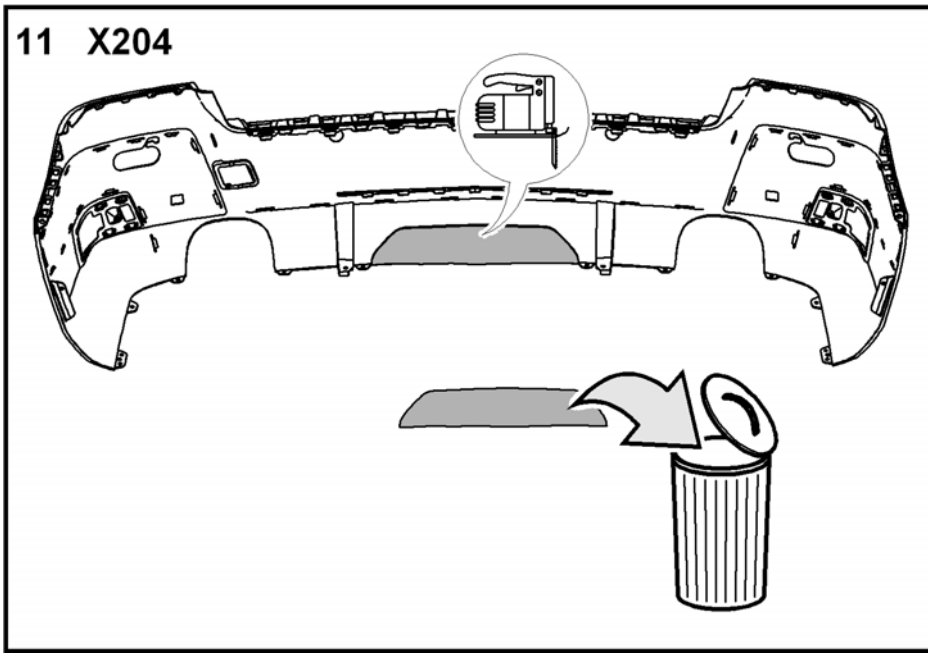

12 A207 / C207

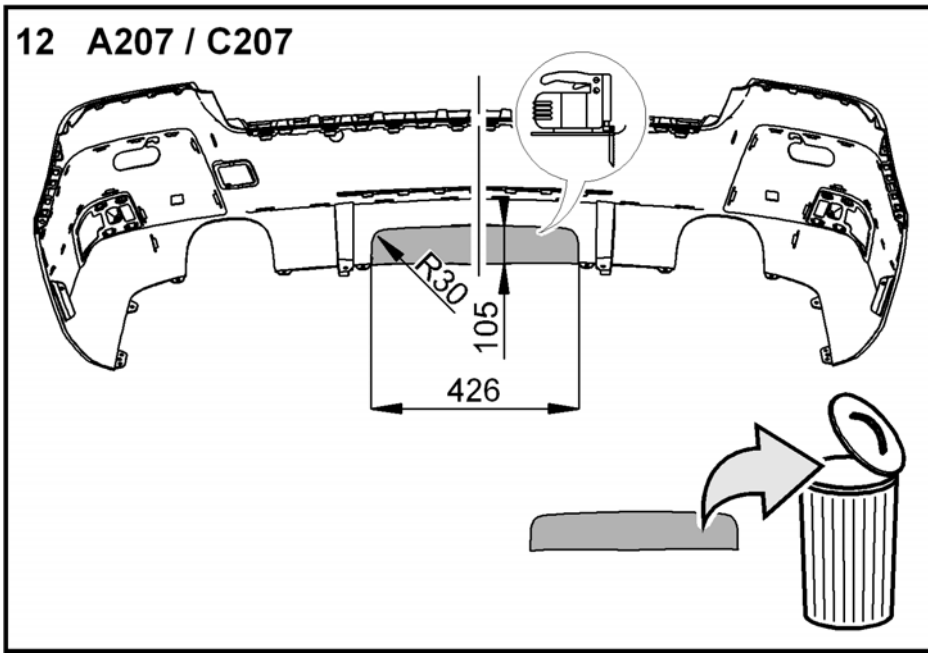

13

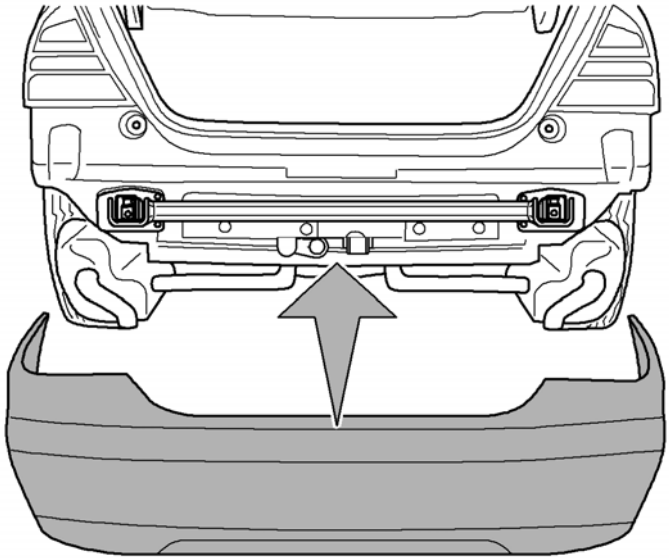

D Der Freiraum nach Anhang VII, Abbildung 30 der Richtlinie 94/20/EG ist zu gewährleisten.

CZ Volný prostor ve smyslu Přílohy VII, obr. 30 Směrnice č. 94/20/EG musí být zaručen.

DK Frirummet skal overholdes iht. bilag VII, fig. 30 i direktiv 94/20/EF.

E Debe garantizarse el espacio libre, conforme al anexo VII, imagen 30 de la directiva comunitaria 94/20/CE.

F L'espace libre doit être garanti conformément à l'annexe VII, illustration 30 de la directive 94/20/CE.

FIN Liitteen VII, direktiivin 94/20/EY kuvan 30 mukainen vapaatila on taattava.

GB The clearance specified in appendix VII, diagram 30 of guideline 94/20/EC must be guaranteed.

GR Πρέπει να εξασφαλίζεται ο ελεύθερος χώρος σύμφωνα με το Παράρτημα VII, εικόνα 30 της Οδηγίας 94/20/ΕΚ.

I Deve essere garantito lo spazio libero secondo l'allegato VII, figura 30 della direttiva 94/20/CE.

N Frirommet etter tillegg VII, figur 30 i direktiv 94/20/EØF skal overholdes.

NL De tussenruimte volgens aanhangsel VII, afbeelding 30 van de richtlijn 94/20/EG moet in acht worden genomen.

PL Zagwarantować swobodną przestrzeń zgodnie z załącznikiem VII, rysunek 30 dyrektywy 94/20/CE.

S Glappet enligt bilaga VII, bild 30 i direktiv 94/20/EG ska garanteras.

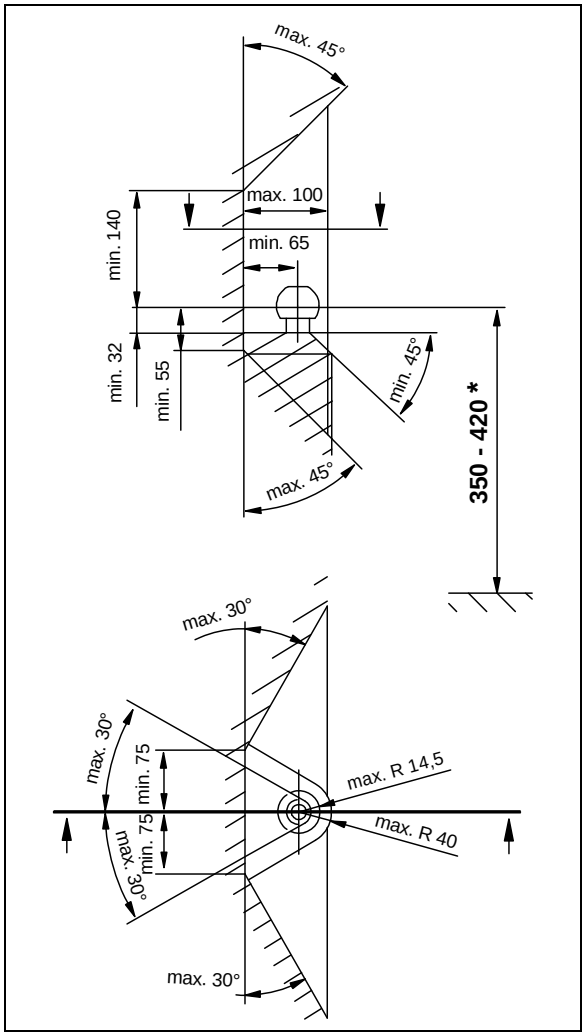

D * bei zulässigem Gesamtgewicht des Fahrzeuges

CZ * při celkové přípustné hmotnosti vozidla

DK * ved tilladt totalvægt for køretøjet

E * con peso total autorizado del vehículo

F * pour poids total en charge autorisé du véhicule

FIN * Ajoneuvon suurimmalla sallitulla kokonaispainolla

GB * at gross vehicle weight rating

GR * για το επιτρεπτό μικτό βάρος του οχήματος

I * per il peso complessivo ammesso del veicolo

N * ved kjøretøyets tillatte totalvekt

NL * bij toegestaan totaal gewicht van het voertuig

PL * przy dopuszczalnym ciężarze całkowitym pojazdu

S * vid fordonets tillåtna totalvikt

GB

Operating instructions for the detachable ball bar

Important!

Check the following points to ensure correct **locking** of the detachable ball bar before each journey:

- **The green marking on the handwheel is aligned with the green area on the ball bar.**
- **The handwheel is resting against the ball bar (no gap).**
- **The lock is closed and the key is withdrawn. The handwheel cannot be pulled out.**
- **The ball bar must be fully inserted into the receiver and be tight. Check by shaking it.**

Repeat the installation procedure if any of the **4 checks is not satisfactory**.
To avoid the **risk of accidents** the towing device should not be used if any of the requirements is not met. Contact the manufacturer if this occurs.
The ball bar can be easily **installed** and **removed** with the normal **force of your hands**.
Never use any sort of aids or tools etc. as this might damage the mechanism.

Never unlock if trailers are attached or load bearing implements mounted!

Always remove the ball bar and **insert** the **plug** into the receiver for journeys without a trailer or load bearing implement. This is especially important if the tow ball impedes sight of the vehicle's registration number or lights.

Detachable ball bar

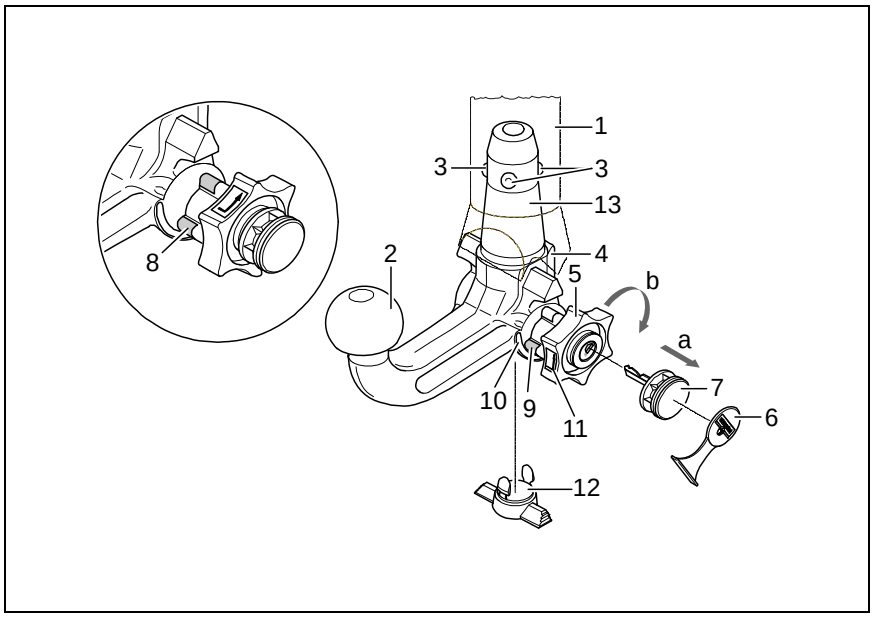

1 Receiver
2 Ball bar
3 Locking balls
4 Release lever
5 Handwheel
6 Cover
7 Key
8 Red marking (handwheel)
9 Green marking (handwheel)
10 Green marking (ball bar)
11 Symbol (release)
12 Plug
13 Stop pin
14 No gap between 2 and 5
15 Gap of approx. 5 mm

Locked position, operating condition

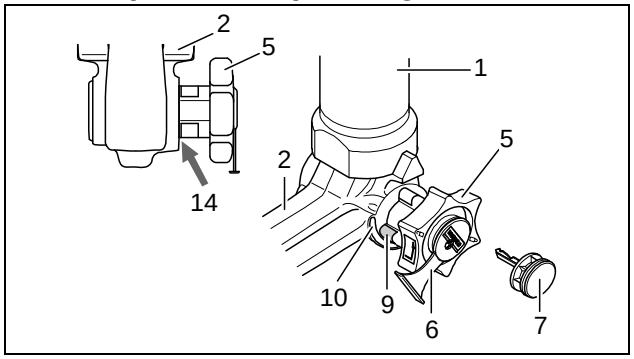

Unlocked position, ball bar not mounted

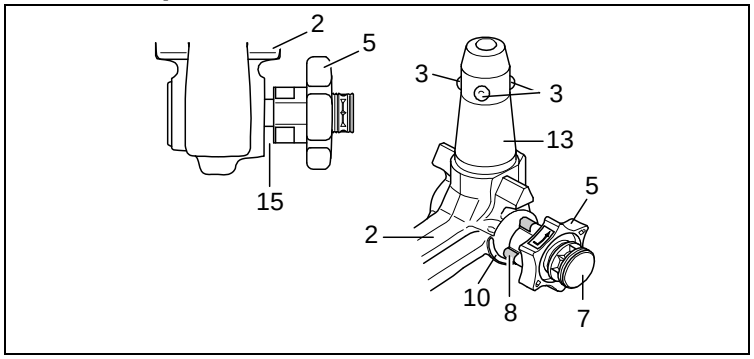

Installation of the ball bar:

1.) Remove the plug from the receiver.
The ball bar is usually in the unlocked position when it is removed from the boot of the vehicle. This is the case if there is a visible gap of approx. 5 mm between the handwheel and the ball bar (see diagram) and the red marking on the handwheel is aligned with the green marking on the ball bar.
Please note that the ball bar can only be inserted in this state!
If the locking mechanism of the ball bar has, for some reason, been disengaged before installation, i.e. the ball bar is in the locked position, the mechanism has to be pre-tensioned. The locked position is easily identifiable as the green marking on the handwheel is aligned with the green marking on the ball bar and there is no gap between the handwheel and the ball bar (see diagram).
Follow the instructions below to pre-tension the locking mechanism:
Insert key and open lock, extract the handwheel in the **direction of arrow a**, and turn it until the limit stop in the **direction of arrow b**. The release lever will then engage and, after the handwheel is released, the locking mechanism remains in the pre-tensioned position.

2.) Install the ball bar together with the stop pin by inserting and pushing both into the receiver.
The **locking operation** is performed **automatically** in this case.
Always keep hands away from the handwheel because it rotates during the locking process.

3.) Close the lock and always remove the key. The key cannot be withdrawn if the lock is open! Press the cover onto the lock.

Removal of the ball bar:

1.) Pull the cover off the lock and press it onto the handle of the key.
Open the lock with the key.

2.) **Hold** the ball bar, extract the handwheel in the **direction of arrow a**, and turn it until the limit stop in the **direction of arrow b** in order to unlock it in the extracted position.
Remove the ball bar from the receiver.
The handwheel can now be released; it automatically engages in the unlocked position.

3.) Stow the ball bar in a safe place in the boot of the vehicle and protect it against dirt.

4.) Insert the plug into the receiver!

Notes!

Any repairs or dismantling of the detachable ball bar should only be carried out by the manufacturer.
Fix the enclosed information plate to the car close to the receiver or inside the boot where it is clearly visible.
Always keep the ball bar and the receiver clean to ensure proper operation.
Ensure regular servicing of the mechanical parts. Treat lock only with graphite.
Lubricate the bearing points, friction surfaces and balls with resin-free grease or oil. Grease and oil also function as additional protection against corrosion.
The ball bar has to be removed and the plug inserted when cleaning the car with a steam jet cleaner. The ball bar must not be cleaned with a steam cleaner.

Important!

2 keys are issued with the detachable ball bar. Make a note of and keep the key no. ???? in case of repeat orders.

