GB

Installation instructions:
Electrical system for towing hitch

General data

Part number		Vehicle
Westfalia	**Vehicle Manufacturer**	
313 176 300 107/113		Daimler Vito/Viano as of 2003

Constant plus extension kit for the 13-pin socket

▶ **Note**

The constant plus extension kit allows a permanent power supply and a charging lead for a booster battery to be used.

Part number		Vehicle
Westfalia	**Vehicle Manufacturer**	
300 025 300 113	--	all vehicles

Important notes

Read the installation manual prior to starting work.

The electrical kit should only be installed by qualified personnel.



Caution – Disconnect the battery!

Danger of damage to the vehicle's electronic system. Data which are stored electronically may get lost.

Read out the fault storage prior to starting work.

Make sure prior to drilling that no objects such as cables, for example, are located behind the covers.

Deburr any bare body parts, like bore holes, and seal them with the help of some rust inhibitor.

Note

During installation special attention has to be paid to the following points:

- Cables must not be pinched or damaged.
- All sealing elements have to be installed properly.
- The socket gasket has to be positioned on the insulating sleeve and not on the individual wires.
- Lay the cables such that they do not rub on the vehicle and are not bent.
- Do not lay any cables near the exhaust system.
- Install the controller such that it is protected against the ingress of humidity. The cable connection should always face downward.
- Degrease the trailer control module to ensure better adhesion on the adhesion points.

When a trailer is used, the rear fog lamp of the traction vehicle is deactivated.

In the case of trailers without rear fog lamp, a rear fog lamp has to be retrofitted.

When a direction indicator lamp fails, also on the trailer, this is indicated by a higher flashing frequency. No additional direction indicator check is necessary.

A socket adapter may only be used in conjunction with a trailer. When the trailer is no longer used, remove the socket adapter.

Correct trailer operation has to be checked using a trailer or a test instrument with load resistors.

Subject to technical alterations!

Installation overview

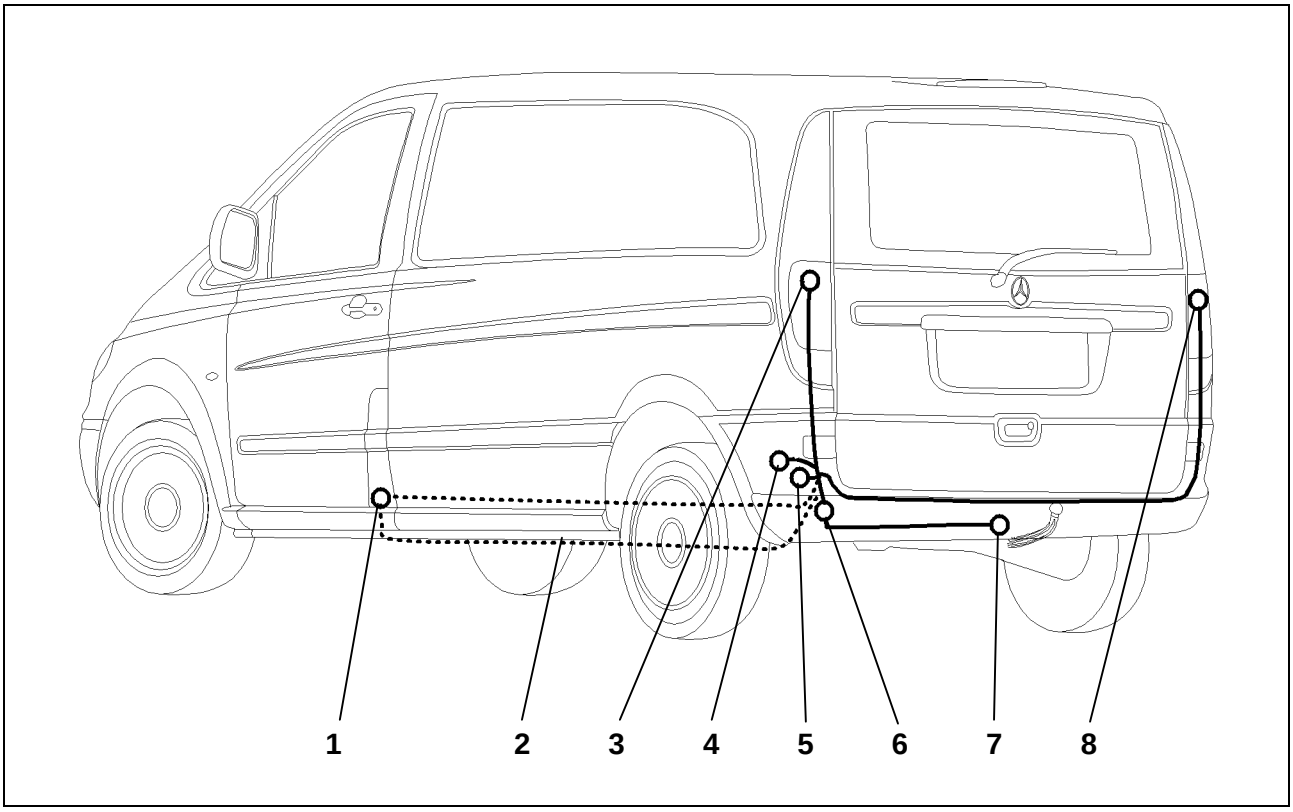

Fig. 3.: Installation overview

1 Battery connection
2 either in the passenger compartment or along the underside of the vehicle
3 Left tail light
4 Trailer controller
5 Ground point
6 Cable bushing
7 Trailer socket
8 Right tail light

Installing the electrical system

1. Disconnect the ground terminal of the battery.
2. If necessary, remove the following coverings and panels:

- Loading edge covering
- Left and right covering inside the luggage trunk
- Rear end plate: Cover of the cable duct on the left side
- Remove the tail light on the left and on the right side.

3. Slip the rubber grommet on the cable harness and adapt its length to the cable.
4. Starting in the luggage trunk, lead the cable end through the cable leadthrough to the outside up to the socket holder plate (Fig. 1/7).
5. Insert the rubber grommet into the cable leadthrough (Fig. 1/6).

Installing the cable set with a bolted socket

6. Fit the socket gasket and connect the cable harness to the socket housing in accordance with the *pin assignment plan* (Fig. 1/7) and push the rubber grommet against the socket.
7. Screw the socket onto the holding plate (Fig. 1/7) using the supplied screws and nuts.
8. Secure the cable harness using cable ties.

Connecting the tail lights

9. Lead the cable end with the gray/red cable along the rear end plate to the right-hand tail light (Fig. 1/8).
10. Unplug the plug of the right-hand tail light and connect it to its counterpart on the cable harness. Plug the residual plug back into the tail light. Make sure that the plugs lock firmly into place.
11. Lead the cable end with the gray/black cable to the left-hand tail light (Fig. 1/3).
12. Unplug the plug of the left-hand tail light and connect it to its counterpart on the cable harness. Plug the residual plug back into the tail light. Make sure that the plugs lock firmly into place.

Connecting the trailer control module

13. Connect both the 12-pin and the 18-pin connector to the trailer module.
14. Fasten the trailer module (Fig. 1/4) in the left-hand cavity behind the tail light using some velcro tape.
15. Connect the brown wires with the eyelet to one ground point on the vehicle (Fig. 1/5). If necessary, set up a conductive connection to the vehicle’s ground.

Connecting the power supply

16. Lay the cable harness with the red cable as shown in Fig. 1/2.

Note

Depending on the vehicle's equipment, the constant plus lines may be laid to the outside and then along the underside of the vehicle to the front either in the passenger compartment (e.g. in the Vito van) or through the second opening of the installed cable duct (e.g. in the Viano).

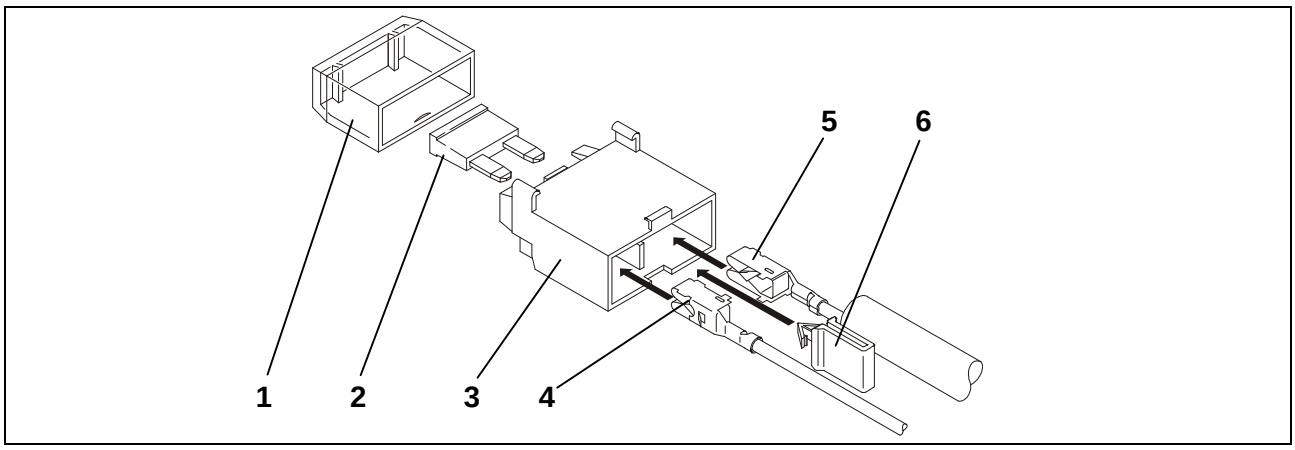

Fig. 4.: Fuse holder assembly

17. Let the quick-connect receptacle of the red cable (Fig. 2/5) of the cable harness and the one of the supplied single red cable (Fig. 2/4) lock into place in the fuse holder.
18. Install the yellow clip (Fig. 2/6).
19. Insert the fuse (Fig. 2/2) and fit the cover (Fig. 2/1).
20. Connect the red/black line in the same way.
21. Screw the separate red cables to the positive battery terminal.

Note

Ensure sufficient strain relief and correct installation of the fuse holder.

22. Only for 13-pin trailer socket:

    Using the 3-pin connector for the constant plus extension kit, the functions "Constant plus", "Charge lead" and "Ground for charge lead" can be retrofitted (Westfalia 300025300113).

Special information concerning vehicles with parking distance control (PDC)

On vehicles with PDC it is possible to deactivate the PDC for trailer operation.

Lay the brown/white cable from the trailer control module plug (Fig. 1/4) to the PDC controller and connect it.

Otherwise the a park assistance with the switch in the cockpit can be deactivated.

If the control line is not used, insulate and secure the cable end.

▶ **Note**

If you have any queries concerning the deactivation of the PDC system, please contact the nearest garage.

Checking correct operation

23. Reconnect the ground of the vehicle’s battery.
24. Check the trailer function with the help of a suitable test instrument (with load resistors) or with the help of a trailer.
25. If necessary remove the NSL lamp from the right tail lamp.
26. Secure all cables using cable ties.
27. Refit any parts removed for installation.

Socket pin assignment

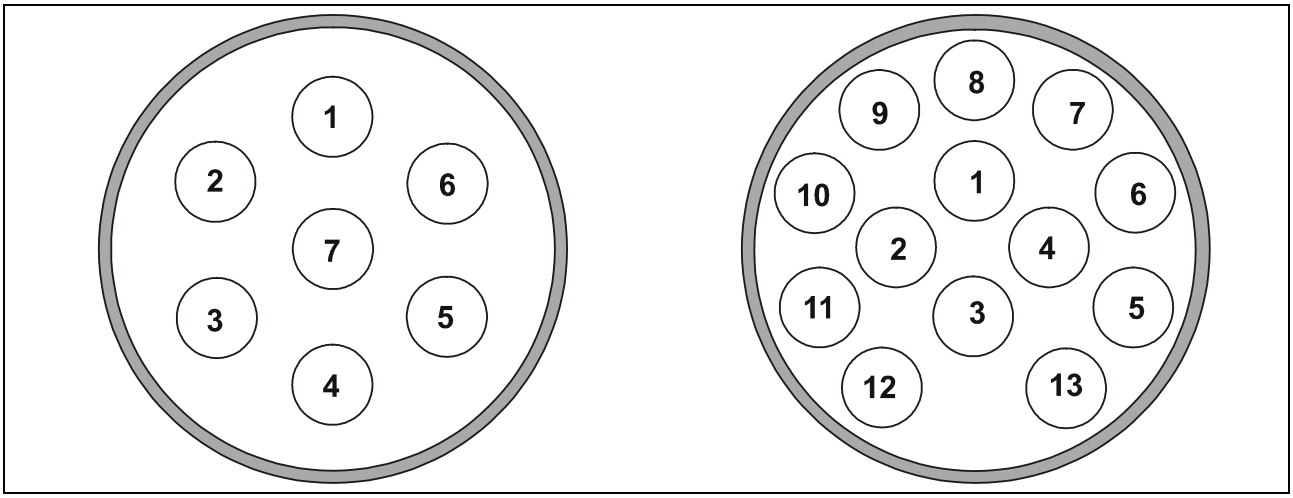

Pin	Circuit	Wire Colour	possible deviations
1	Indicator lamp, left-hand side	black/white	
2	Rear fog lamp	white	green/white in case of 7-pin
3	Ground	brown	
4	Indicator lamp, right-hand side	black/green	
5	Tail light, right-hand side	gray/red	
6	Stop lamp	black/red	
7	Tail light, left-hand side	gray/black	
8	Back-up light	green	
9	Constant plus	red	
10	Charging lead	yellow	
11	Ground (circuit 10)	brown/white	
12	--	--	
13	Ground (circuit 9)	brown	