## FITTING INSTRUCTION

| Clamp mark in acc. with | | Cables joining |
|---|---|---|
| ISO | PN | |
| 1 | L | Left directional lights |
| 2 | + | Rear fog lights |
| 3 | 31 | Ground |
| 4 | R | Right directional lights |
| 5 | 58R | Right side parking lights |
| 6 | 54 | Stoplights |
| 7 | 58L | Left side parking lights |

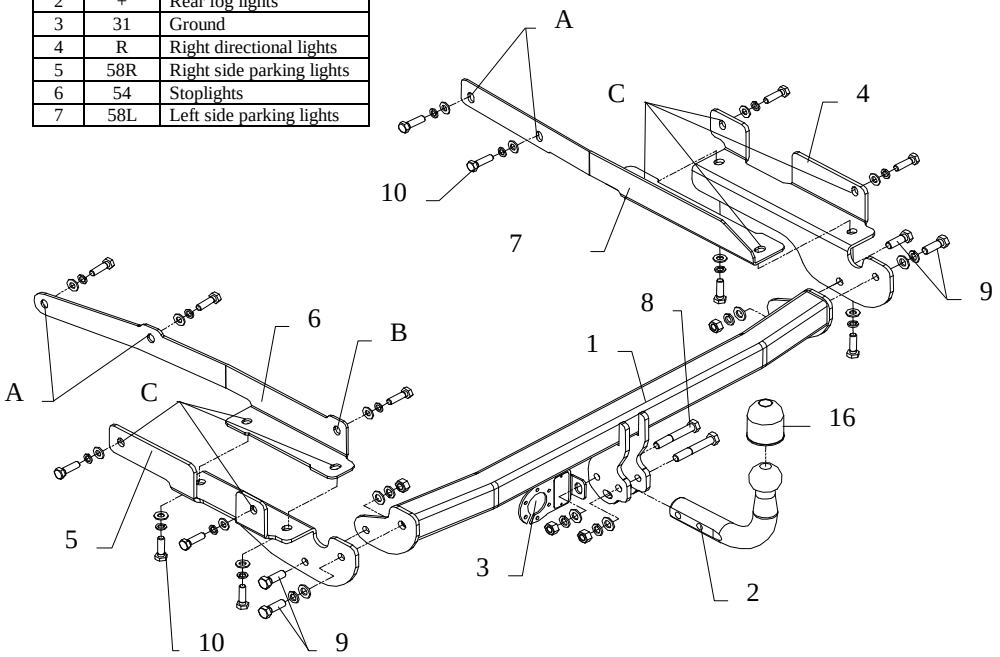


This towbar is designed to assembly in following cars:
**MITSUBISHI COLT, 5 doors,** produced since 2005, catalogue no. **Z33** and is prepared to tow trailers max total weight **1000kg** and max vertical load **50kg**.

### *From manufacturer*

Thank you for buying our product. Their reliability has been confirmed in many tests. Reliability of towbar depends also on correct assembly and correct exploitation. For this reasons we kindly ask to read carefully this instruction and apply to hints.

*The towbar should be install in points described by a car producer.*

## Assemble instruction

1. To install our towbar do not remove a rear bumper.
2. Underneath the car detach the fastening.
3. In bottom part of the bumper cut out fragments according to figure, see below.

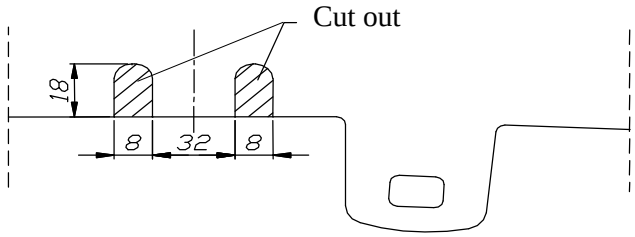


4. Fix elements pos. 6 and 7 to chassis members in original prepared points using bolts M10x35mm (pos. 10) through holes A and B (loosely).
5. Fix elements pos. 4 and 5 through holes C using bolts M10x35mm (pos. 10).
6. Slip man bar of the towbar between elements 4 and 5 and fix it using bolts M12x35m (pos. 9)
7. Screw tow-ball (pos. 2) and socket plate (pos. 3) using bolts M12x75mm (pos. 8) from accessories .
8. Tighten all bolts according to the torque shown in the table.
9. Connect electric wires of 7-poles socket according to the instruction of the car. (Recommend to make at authorized service station)
10. Complete paint layer damaged during installation.

Torque settings for nuts and bolts (8,8):

| | | | |
|---|---|---|---|
| **M 8** | 25 Nm | **M 10** | 55 Nm |
| **M 12** | 85 Nm | **M 14** | 135 Nm |

### NOTE

After install the towbar you should get adequate note in registration book (at authorised service station).The car should be equipped with:

- Indicators
- Tow mirrors

After 1000km check all bolts and nuts. The ball of towbar must be always kept clear and conserve with a grease.

Towbar accessories:

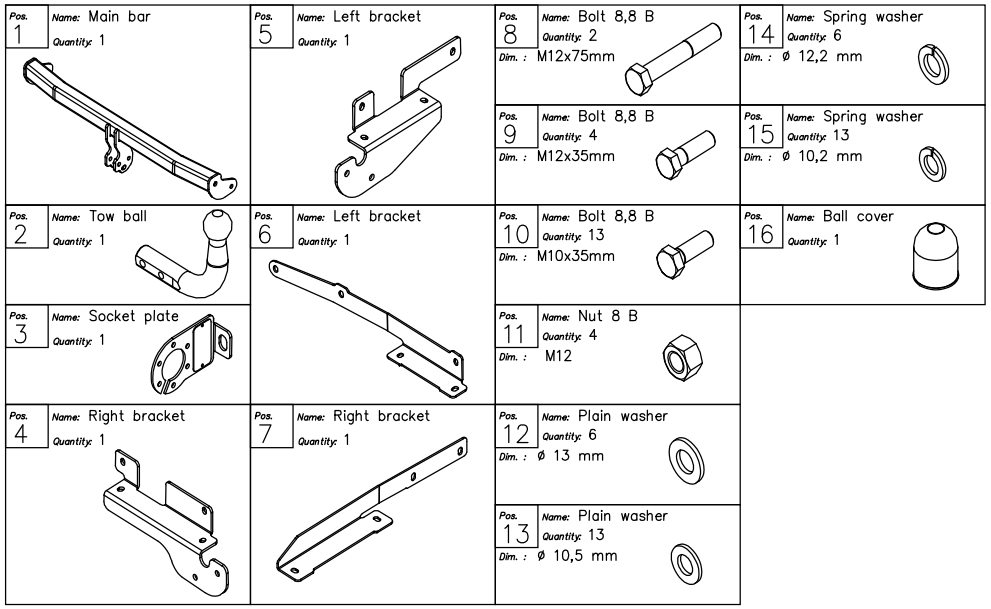


**PPUH AUTO-HAK S.J.**

Produkcja Haków Holowniczych
Henryk & Zbigniew Nejman
76-200 SŁUPSK ul. Słoneczna 16K
tel/fax (059) 8-414-414; 8-414-413
E-mail: office@autohak.com.pl
www. autohak.com.pl

# Towing hitch (without electrical set)

Class: **A50-X** Cat. no. **Z33**
Designed for:
Manufacturer: **MITSUBISHI**
Model: **COLT**
Type: **5 doors**

produced since 2005

Technical data:
**D**-value: **6,04 kg**
maximum trailer weight: **1000 kg**
maximum vertical cup load: **50 kg**

**Approval number acc. to regulations EKG/ONZ 55.01: E20-55R-01 1776**

## *Foreword*

This towbar is designed according to rules of safety traffic regulations. The towing hitch is a safety component and can be install only by qualified personnel. Any alteration or conversion of the towing hitch is prohibited and would lead to cancellation of design certification. Remove insulating compound and underseal from vehicle (if present) in the area of the matting surfaces of the towing hitch.
The vehicle manufacturer's specifications regarding trailer load and max. vertical cup load are decisive for driving, and values for the towing hitch cannot be exceeded.
*D-value formula:*

$$\frac{\text{Max trailer weight [kg]} \times \text{Max vehicle weight [kg]}}{\text{Max trailer weight [kg]} + \text{Max vehicle weight [kg]}} \times \frac{9{,}81}{1000} = D\ [kN]$$