FITTING INSTRUCTION

Clamp mark in acc. with		Cables joining
ISO	PN	
1	L	Left directional lights
2	+	Rear fog lights
3	31	Ground
4	R	Right directional lights
5	58R	Right side parking lights
6	54	Stoplights
7	58L	Left side parking lights

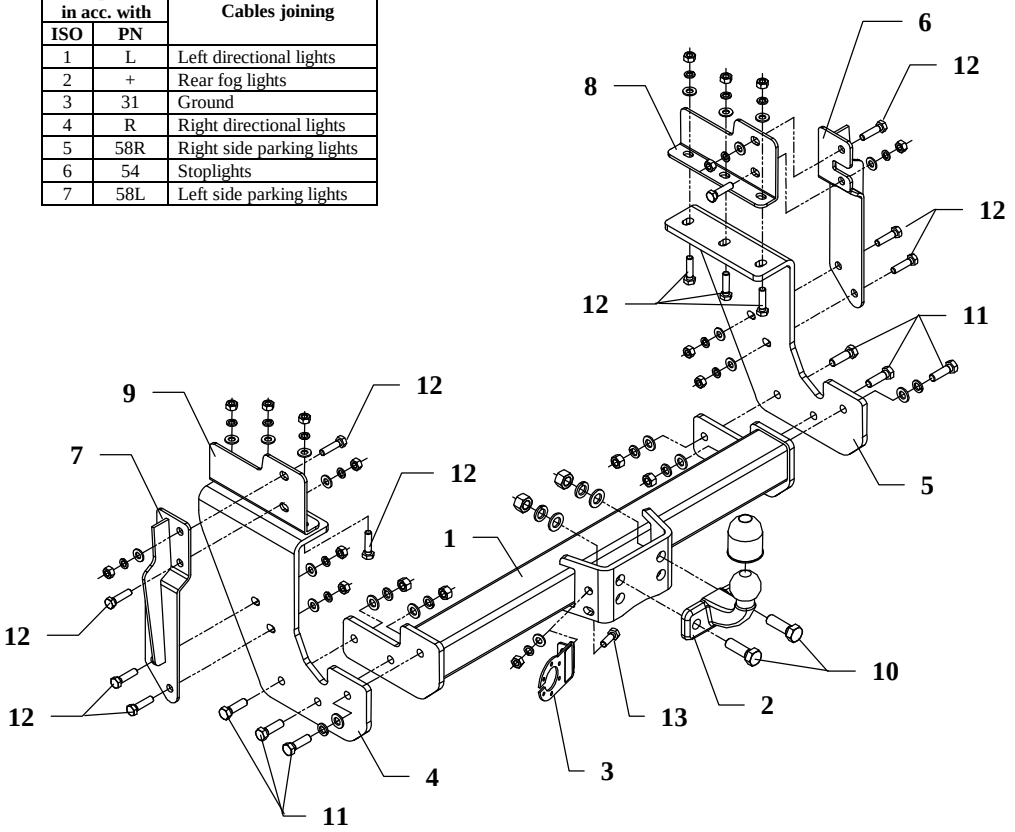

This towbar is designed to assembly in following car: **MITSUBISHI CANTER (loading platform),** produced since 1993, catalogue number **Z32** and is prepared to tow trailers max total weight up to **2500 kg** and max vertical load **100 kg**.

From manufacturer

Thank you for buying our product. Their reliability has been confirmed in many tests. Reliability of towbar depends also on correct assembly and right operation. For this reasons we kindly ask to read carefully this instruction and apply to hints.

The towbar should be install in points described by a car producer.

The instruction of the assembly

1. On existing in car frame holes apply:
   - from outside - side fish-plates (pos. 6 and 7)
   - from inside - suitable angle bars (pos. 8 and 9)
   - underneath - side brackets of towbar (pos. 4 and 5)

   All elements fix loosely through car frame using bolts as shown on the figure.
2. Fix elements of the towbar pos. 4, 5, 6, 7, 8, 9 to the chassis frame according to figure 1 (loosely).
3. Between installed side brackets (pos. 4 and 5) put main bar of the towbar (pos. 1) and fix it by bolts M12x40mm (pos. 11).
4. Fix tow ball (pos. 2) using bolts M16x50mm (pos. 10)
5. Fix the socket plate (pos. 3) as shown on the drawing.
6. Tight all bolts according to the torque shown in the table.
7. Connect electric wires of 7-poles socket according to the instruction of the car. (Recommend to make at authorized service station)
8. Complete paint layer damaged during installation.

Torque settings for nuts and bolts (8,8):		
M6 - 11 Nm	**M8** - 25 Nm	**M10** - 50 Nm
M12 - 87 Nm	**M14** - 138 Nm	**M16** - 210 Nm

NOTE

After install the towbar you should get adequate note in registration book (at authorised service station).The car should be equipped with:

- Indicators
- Tow mirrors

After 1000km of exploitation check all bolts and nuts. The ball of towbar must be always kept clear and conserve with a grease.

Towbar accessories:

Pos. 1 Main bar PCS.: 1 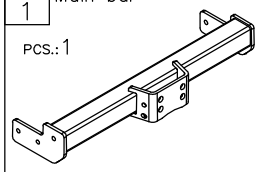	Pos. 6 Right fish–plate PCS.: 1 	Pos. 12 Bolt 8,8 B M10x40mm PCS.: 14 	Pos. 18 Spring washer ø12,2mm PCS.: 6 
	Pos. 7 Left fish–plate PCS.: 1 	Pos. 13 Bolt 8,8 B M10x30mm PCS.: 1 	Pos. 19 Spring washer ø10,2mm PCS.: 15 
Pos. 2 Tow ball PCS.: 1 	Pos. 8 Right angle bar PCS.: 1 	Pos. 14 Plain washer ø17mm PCS.: 2 	Pos. 20 Nut 8 B M16 PCS.: 2 
Pos. 3 Socket plate PCS.: 1 	Pos. 9 Left angle bar PCS.: 1 	Pos. 15 Plain washer ø12mm PCS.: 6 	Pos. 21 Nut 8 B M12 PCS.: 4 
Pos. 4 Left bracket PCS.: 1 	Pos. 10 Bolt 8,8 B M16x50mm PCS.: 2 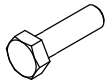	Pos. 16 Plain washer ø10mm PCS.: 15 	Pos. 22 Nut 8 B M10 PCS.: 15 
Pos. 5 Right bracket PCS.: 1 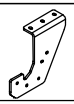	Pos. 11 Bolt 8,8 B M12x40mm PCS.: 6 	Pos. 17 Spring washer ø16,3mm PCS.: 2 	Pos. 23 Ball cover PCS.: 1 

PPUH AUTO-HAK S.J.

Produkcja Zaczepów Kulowych
Henryk & Zbigniew Nejman
76-200 SŁUPSK ul. Słoneczna 16K
tel/fax (059) 8-414-414; 8-414-413
E-mail: office@autohak.com.pl
www. autohak.com.pl

Towing hitch (without electrical set)

Class: **A50-X** Cat. no. **Z32**
Designed for:
Manufacturer: **MITSUBISHI**
Model: **CANTER**
Type: **loading platform**
produced since 1993

Technical data:
D-value: **13,4 kN**
maximum trailer weight: **2500 kg**
maximum vertical cup load: **100 kg**

Approval number acc. to regulations EKG/ONZ 55.01: E20-55R-01 1617

Foreword

This towbar is designed according to rules of safety traffic regulations. The towing hitch is a safety component and must be installed only by qualified personnel. Any alteration or conversion to the towing hitch is prohibited and would lead to cancellation of design certification. Remove insulating compound and underseal from vehicle (if present) in the area of the matting surfaces of the towing hitch.
The vehicle manufacturer's specifications regarding trailer load and max. vertical cup load are decisive for driving, and values for the towing hitch cannot be exceeded.
D-value formula:

$$\frac{\text{Max trailer weight [kg]} \times \text{Max vehicle weight [kg]}}{\text{Max trailer weight [kg]} + \text{Max vehicle weight [kg]}} \times \frac{9{,}81}{1000} = D\ [\text{kN}]$$