Towing hitch accessories:

Pos. 1 Name: Main bar Quantity: 1 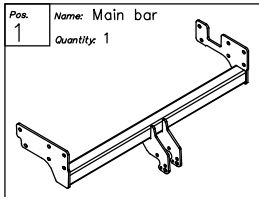	Pos. 5 Name: Right bracket Quantity: 1 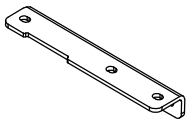	Pos. 8 Name: Bolt 8,8 B Quantity: 12 Dim. : M10x1,25x35mm 	Pos. 14 Name: Spring washer Quantity: 18 Dim. : Ø 10,2 mm 
		Pos. 10 Name: Nut 8 B Quantity: 6 Dim. : M10 	Pos. 15 Name: Ball cover Quantity: 1 
Pos. 2 Name: Tow ball Quantity: 1 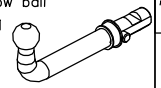	Pos. 6 Name: Left bracket Quantity: 1 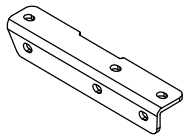	Pos. 11 Name: Plain washer Quantity: 4 Dim. : Ø 13 mm 	Pos. 16 Name: Body of the automat Quantity: 1 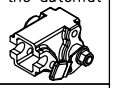
Pos. 3 Name: Socket plate Quantity: 1 		Pos. 12 Name: Plain washer Quantity: 18 Dim. : Ø 10,5 mm 	Pos. 17 Name: Body plug Quantity: 1 
Pos. 4 Name: Bolt 8,8 B Quantity: 4 Dim. : M12x25mm 	Pos. 7 Name: Bolt 8,8 B Quantity: 6 Dim. : M10x35mm 	Pos. 13 Name: Spring washer Quantity: 4 Dim. : Ø 12,2 mm 	

PPUH AUTO-HAK Sp.J.

Produkcja Zaczepów Kulowych
Henryk & Zbigniew Nejman
76-200 SŁUPSK ul. Słoneczna 16K
tel/fax (059) 8-414-414; 8-414-413
E-mail: office@autohak.com.pl
www. autohak.com.pl

Towing hitch (without electrical set)

Class: **A50-X** Cat. no. **Z31A**
Designed for:
Manufacturer: **MITSUBISHI**
Model: **OUTLANDER**
produced since 04.2003 till 03.2007

Technical data:
D-value: **8,53 kg**
maximum trailer weight: **1500 kg**
maximum vertical cup load: **75 kg**

Approval number according to Directive 94/20/EC: e20*94/20*0301*00

Foreword

This towing hitch is designed according to rules of safety traffic regulations. The towing hitch is a safety component and can be install only by qualified personnel. Any alteration or conversion of the towing hitch is prohibited and would lead to cancellation of design certification. Remove insulating compound and underseal from vehicle (if present) in the areas of the matting surfaces of the towing hitch.
The vehicle manufacturer's specifications regarding trailer load and max. vertical cup mass are decisive for driving whereat values for the towing hitch cannot be exceeded.
D-value formula:

$$\frac{\text{Max trailer weight [kg]} \times \text{Max vehicle weight [kg]}}{\text{Max trailer weight [kg]} + \text{Max vehicle weight [kg]}} \times \frac{9{,}81}{1000} = D\ [\text{kN}]$$

FITTING INSTRUCTION

Clamp mark in acc. with		Cables joining
ISO	PN	
1	L	Left directional lights
2	+	Rear fog lights
3	31	Ground
4	R	Right directional lights
5	58R	Right side parking lights
6	54	Stoplights
7	58L	Left side parking lights

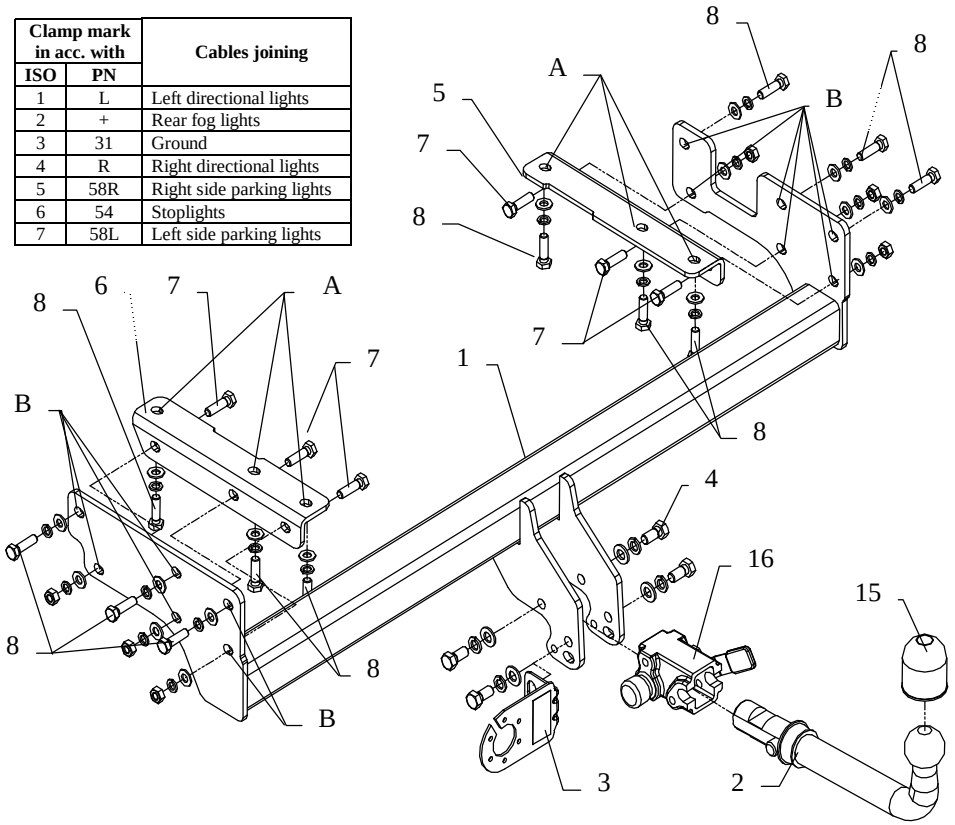

This towing hitch is designed to assembly in following cars: **MITSUBISHI OUTLANDER,** produced since 04.2003 till 03.2007, catalogue number **Z31A** and is prepared to tow trailers max total weight **1500** kg and max vertical load **75** kg.

From manufacturer

Thank you for buying our product. Their reliability has been confirmed in many tests. Reliability of towing hitch depends also on correct assembly and correct exploitation. For this reasons we kindly ask to read carefully this instruction and apply to hints.

The towing hitch should be install in points described by a car producer.

The instruction of the assembly

1. Get lower the muffler the rear handle.
2. Unscrew original transport handles (not used any more).
3. From below the left chassis member put element (pos. 6) in that way so holes (pos. A) agree to original, threaded holes and screw all using bolts M10x1,25x35 mm (pos. 8) (fix loosely).
4. To the right chassis member screw element (pos. 5) and screw in points 3.
5. Main bar (pos. 1) put to chassis member in that way so holes (pos. B) agree to original holes and to holes in elements (pos. 5 and 6), then screw using bolts M10x1,25x35 mm (pos. 8) and bolts M10x35 mm (pos. 7) – see drawing.
6. Fix body of the automat (pos. 16) and the socket plate (pos. 3) using bolts M12x25mm (pos. 4) from accessories. Place tow-ball (pos. 2) according to supplied instruction
7. Tighten all bolts according to the torque shown in the table.
8. Connect electric wires of 7-poles socket according to the instruction of the car. (Recommend to make at authorized service station)
9. Complete paint layer damaged during installation.

Torque settings for nuts and bolts (8,8):

M6 - 11 Nm	**M8 -** 25 Nm	**M10 -** 50 Nm
M12 - 87 Nm	**M14 -** 138 Nm	**M16 -** 210 Nm

NOTE

After install the towing hitch you should get adequate note in registration book (at authorised service station).The car should be equipped with:

- Indicators
- Tow mirrors

After 1000km of exploitation check all bolts and nuts. The ball of towing hitch must be always kept clear and conserve with a grease.