FITTING INSTRUCTION

Clamp mark in acc. with		Cables joining
ISO	PN	
1	L	Left directional lights
2	+	Rear fog lights
3	31	Ground
4	R	Right directional lights
5	58R	Right side parking lights
6	54	Stoplights
7	58L	Left side parking lights

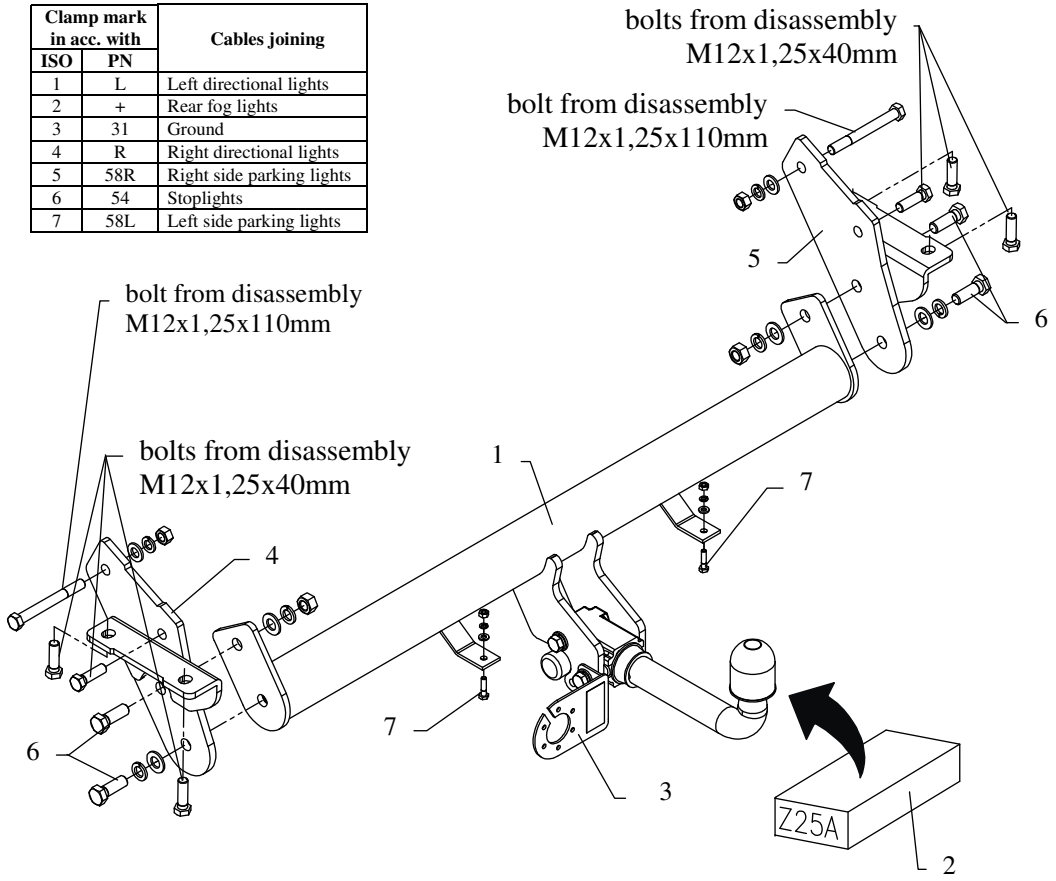

This towing hitch is designed to assembly in following cars: **MITSUBISHI PAJERO 5 doors (V60) / MONTERO 5 doors (V60)** produced since 2000 till 2002, catalogue number **Z25A** and is prepared to tow trailers max total weight **3000 kg** and max vertical load **125 kg.**

From manufacturer

Thank you for buying our product. Their reliability has been confirmed in many tests. Reliability of towing hitch depends also on correct assembly and correct exploitation. For this reasons we kindly ask to read carefully this instruction and apply to hints.

The towing hitch should be install in points described by a car producer.

The instruction of the assembly

1. Disassemble central, plastic part of the bumper.
2. Disassemble original tow eyes from the frame (not used any more).
3. Get lower the muffler from the last handle.
4. Underneath of the car put side brackets (pos. 4 and 5) and fix it instead of unscrewed original tow eyes. Use original bolts.
5. Between brackets (pos. 4 and 5) put main bar of the towing hitch (pos. 1) and fix using bolts M14x40mm (pos. 6) from towing hitch accessories.
6. Reassemble the bumper after cut out his fragment in axis 70x50mm.
7. Fix body of the automat and place tow-ball according to supplied instruction. Note! Remember to place socket plate (pos. 3) as shown on the drawing 1.
8. Screw the handle of the muffler.
9. Tighten all bolts according to the torque shown in the table.
10. Connect electric wires of 7-poles socket according to the instruction of the car. (Recommend to make at authorized service station)
11. Complete paint layer damaged during installation.

Torque settings for nuts and bolts (8,8):

M 8	25 Nm	**M 10**	55 Nm
M 12	85 Nm	**M 14**	135 Nm

NOTE

After install the towing hitch you should get adequate note in registration book (at authorised service station).The car should be equipped with:

- Indicators
- Tow mirrors

After 1000km check all bolts and nuts. The ball of towing hitch must be always kept clear and conserve with a grease.

Towing hitch accessories:

Pos. 1 Name: Main bar Quantity: 1 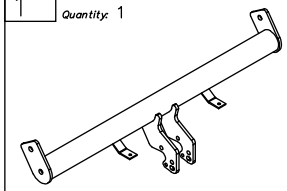	Pos. 5 Name: Right bracket Quantity: 1 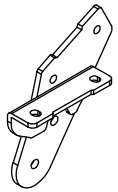	Pos. 10 Name: Nut 8 B Quantity: 2 Dim. : M6 
		Pos. 11 Name: Plain washer Quantity: 4 Dim. : Ø 15 mm 
Pos. 2 Tow ball (mounting set) PCS.:1 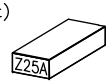	Pos. 6 Name: Bolt 8,8 B Quantity: 4 Dim. : M14x40mm 	Pos. 12 Name: Plain washer Quantity: 2 Dim. : Ø 13 mm 
Pos. 3 Socket plate PCS.: 1 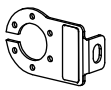	Pos. 7 Name: Bolt 8,8 B Quantity: 2 Dim. : M6x25mm 	Pos. 13 Name: Plain washer Quantity: 2 Dim. : Ø 6,4 mm 
Pos. 4 Name: Left bracket Quantity: 1 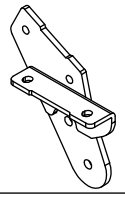	Pos. 8 Name: Nut 8 B Quantity: 2 Dim. : M14 	Pos. 14 Name: Spring washer Quantity: 4 Dim. : Ø 14,2 mm 
	Pos. 9 Name: Nut 8 B Quantity: 2 Dim. : M12x1,25 	Pos. 15 Name: Spring washer Quantity: 2 Dim. : Ø 12,2 mm 
		Pos. 16 Name: Spring washer Quantity: 2 Dim. : Ø 6,1 mm 

PPUH AUTO-HAK S.J.

Produkcja Haków Holowniczych
Henryk & Zbigniew Nejman
76-200 SŁUPSK ul. Słoneczna 16K
tel/fax (059) 8-414-414; 8-414-413
E-mail: office@autohak.com.pl
www. autohak.com.pl

Towing hitch (without electrical set)

Class: **A50-X** Cat. no. **Z25A**
Designed for:
Manufacturer: **MITSUBISHI**
Model: **PAJERO / MONTERO**
Type: **5 doors (V60)**
produced since 2000 till 2002

Technical data:
D-value: **15,41 kN**
maximum trailer weight: **3000 kg**
maximum vertical cup load: **125 kg**

Approval number according to Directive 94/20/EC: e20*94/20*0292*00

Foreword

This towing hitch is designed according to rules of safety traffic regulations. The towing hitch is a safety component and can be install only by qualified personnel. Any alteration or conversion of the towing hitch is prohibited and would lead to cancellation of design certification. Remove insulating compound and underseal from vehicle (if present) in the area of the matting surfaces of the towing hitch.
The vehicle manufacturer's specifications regarding trailer load and max. vertical cup load are decisive for driving, and values for the towing hitch cannot be exceeded.
D-value formula:

$$\frac{\text{Max trailer weight [kg]} \times \text{Max vehicle weight [kg]}}{\text{Max trailer weight [kg]} + \text{Max vehicle weight [kg]}} \times \frac{9{,}81}{1000} = D\ [\text{kN}]$$