FITTING INSTRUCTION

Clamp mark in acc. with		Cables joining
ISO	PN	
1	L	Left directional lights
2	+	Rear fog lights
3	31	Ground
4	R	Right directional lights
5	58R	Right side parking lights
6	54	Stoplights
7	58L	Left side parking lights

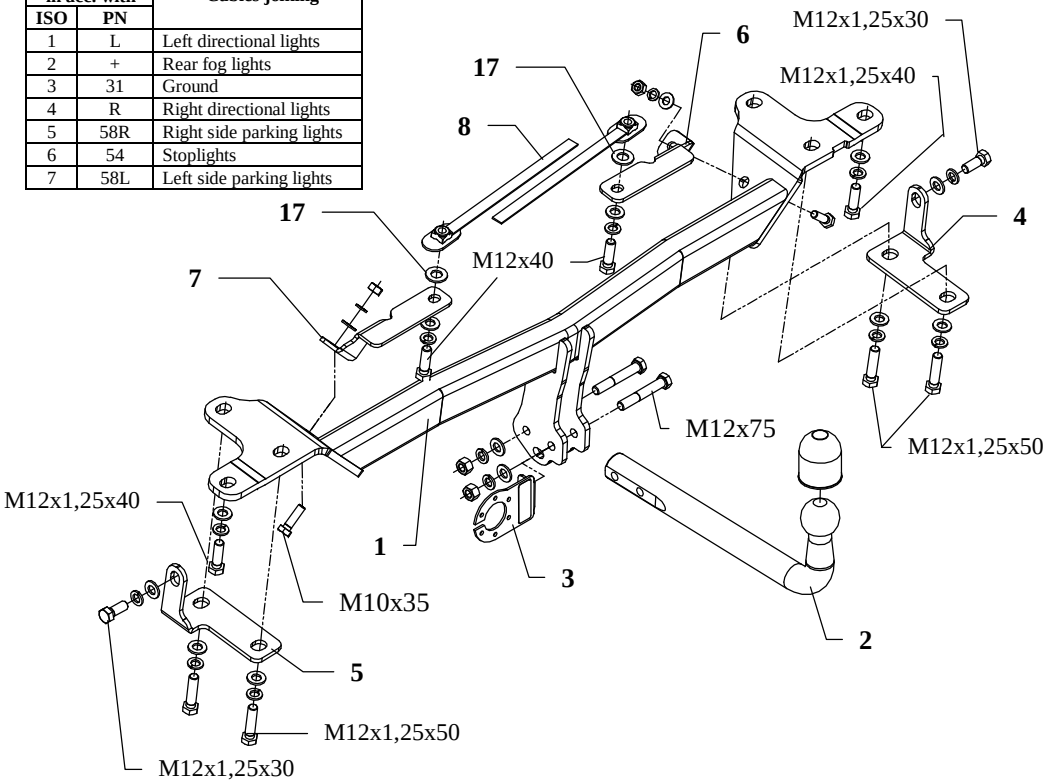

This towing hitch is designed to assembly in following cars: **SUZUKI GRAND VITARA, 3 doors,** produced since 2005, catalogue number **W24** and is prepared to tow trailers max total weight **1600 kg** and max vertical load **85 kg**.

The instruction of the assembly

1. Disassemble original towing eye (right side underneath).
2. Disassemble last muffler and thermal shield. Cut out fragments of thermal shield according to figure 2 then reassemble it..
3. In central part of the bumper (in axis) cut out fragment 50mm width and 25mm depth..
4. According to figure 4 drill hole ø28mm underneath the car.
5. Through made hole insert nuts on the jibs (pos. 8) in this way so nuts agree with original holes. Fix loosely couplers (pos. 6 and 7) using bolts M10x35mm (pos. 14). Remember to put washer M14 (pos. 17) between couplers and frame of the car.
6. Hole X blind using rubber plug (pos. 23).
7. Fix main bar of the towing hitch (pos. 1) to the frame of the car using bolts M12x1,25x30mm, M12x1,25x40mm and using bolts M12x1,25x50mm through handles (pos. 4 and 5). On the right side on the handle pos. 4 fix original towing eye.
8. Fix tow-ball (pos. 2) and socket plate (pos. 3) by bolts M12x75mm (pos. 9) from equipment.
9. Connect electric wires of 7-poles socket according to the instruction of the car. (Recommend to make at authorized service station)
10. Complete paint layer damaged during installation.

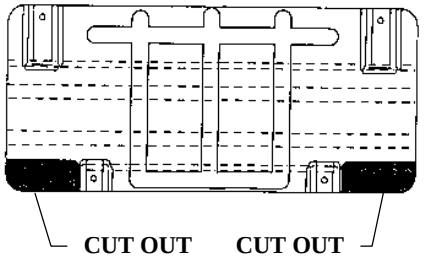

Fig. 2 Thermal shield cut outs

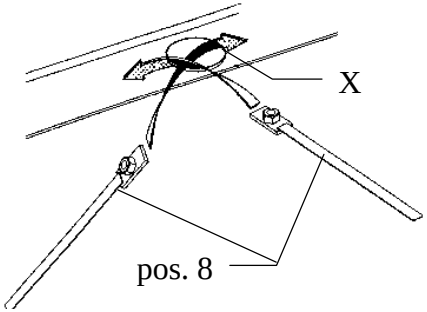

Fig. 3 Jibs placement method

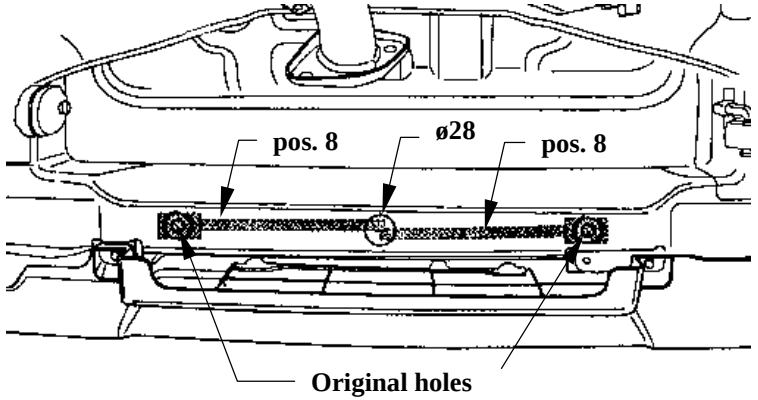

Fig. 4 The jibs plecement

NOTE

After install the towing hitch you should get adequate note in registration book (at authorised service station).The car should be equipped with:

- Indicators
- Tow mirrors

After 1000km check all bolts and nuts. The ball of towing hitch must be always kept clear and conserve with a grease.

Towing hitch equipment:

Pos. 1 Name: Main bar Quantity: 1 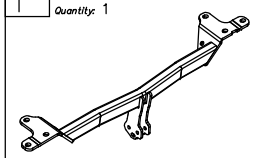	Pos. 6 Name: Right coupler Quantity: 1 	Pos. 12 Name: Bolt 8,8 B Quantity: 2 Dim. : M12x1,25x30mm 	Pos. 18 Name: Plain washer Quantity: 14 Dim. : Ø 13 mm 
	Pos. 7 Name: Left coupler Quantity: 1 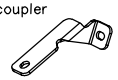	Pos. 13 Name: Bolt 8,8 B Quantity: 2 Dim. : M12x40mm 	Pos. 19 Name: Plain washer Quantity: 2 Dim. : Ø 10,5 mm 
Pos. 2 Name: Tow ball Quantity: 1 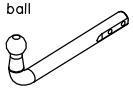	Pos. 8 Name: Nut on the jib Quantity: 2 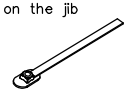	Pos. 14 Name: Bolt 8,8 B Quantity: 2 Dim. : M10x35mm 	Pos. 20 Name: Spring washer Quantity: 12 Dim. : Ø 12,2 mm 
Pos. 3 Name: Socket plate Quantity: 1 	Pos. 9 Name: Bolt 8,8 B Quantity: 2 Dim. : M12x75mm 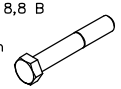	Pos. 15 Name: Nut 8 B Quantity: 2 Dim. : M12 	Pos. 21 Name: Spring washer Quantity: 2 Dim. : Ø 10,2 mm 
Pos. 4 Name: Right handle Quantity: 1 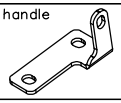	Pos. 10 Name: Bolt 8,8 B Quantity: 4 Dim. : M12x1,25x50mm 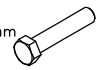	Pos. 16 Name: Nut 8 B Quantity: 2 Dim. : M10 	Pos. 22 Name: Ball cover Quantity: 1 
Pos. 5 Name: Left handle Quantity: 1 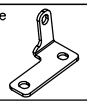	Pos. 11 Name: Bolt 8,8 B Quantity: 2 Dim. : M12x1,25x40mm 	Pos. 17 Name: Plain washer Quantity: 2 Dim. : Ø 15 mm 	Pos. 23 Name: Rubber plug Quantity: 1 

PPUH AUTO-HAK S.J.

Produkcja Haków Holowniczych
Henryk & Zbigniew Nejman
76-200 SŁUPSK ul. Słoneczna 16K
tel/fax (059) 8-414-414; 8-414-413
E-mail: office@autohak.com.pl
www. autohak.com.pl

Towing hitch (without electrical set)

Class: **A50-X** Cat. no. **W24**
Designed for:
Manufacturer: **SUZUKI**
Model: **GRAND VITARA**
Type: **3 doors**
produced since 2005

Technical data:
D-value: **8,85 kN**
maximum trailer weight: **1600 kg**
maximum vertical cup load: **85 kg**

Approval number according to Directive 94/20/EC: e20*94/20*0015*00

Foreword

This towing hitch is designed according to rules of safety traffic regulations. The towing hitch is a safety component and can be install only by qualified personnel. Any alteration or conversion of the towing hitch is prohibited and would lead to cancellation of design certification. Remove insulating compound and underseal from vehicle (if present) in the area of the matting surfaces of the towing hitch.
The vehicle manufacturer's specifications regarding trailer load and max. vertical cup load are decisive for driving whereat values for the towing hitch cannot be exceeded.
D-value formula:

$$\frac{\text{Max trailer weight [kg]} \times \text{Max vehicle weight [kg]}}{\text{Max trailer weight [kg]} + \text{Max vehicle weight [kg]}} \times \frac{9{,}81}{1000} = D\ [\text{kN}]$$