FITTING INSTRUCTION

Clamp mark in acc. with		Cables joining
ISO	PN	
1	L	Left directional lights
2	+	Rear fog lights
3	31	Ground
4	R	Right directional lights
5	58R	Right side parking lights
6	54	Stoplights
7	58L	Left side parking lights

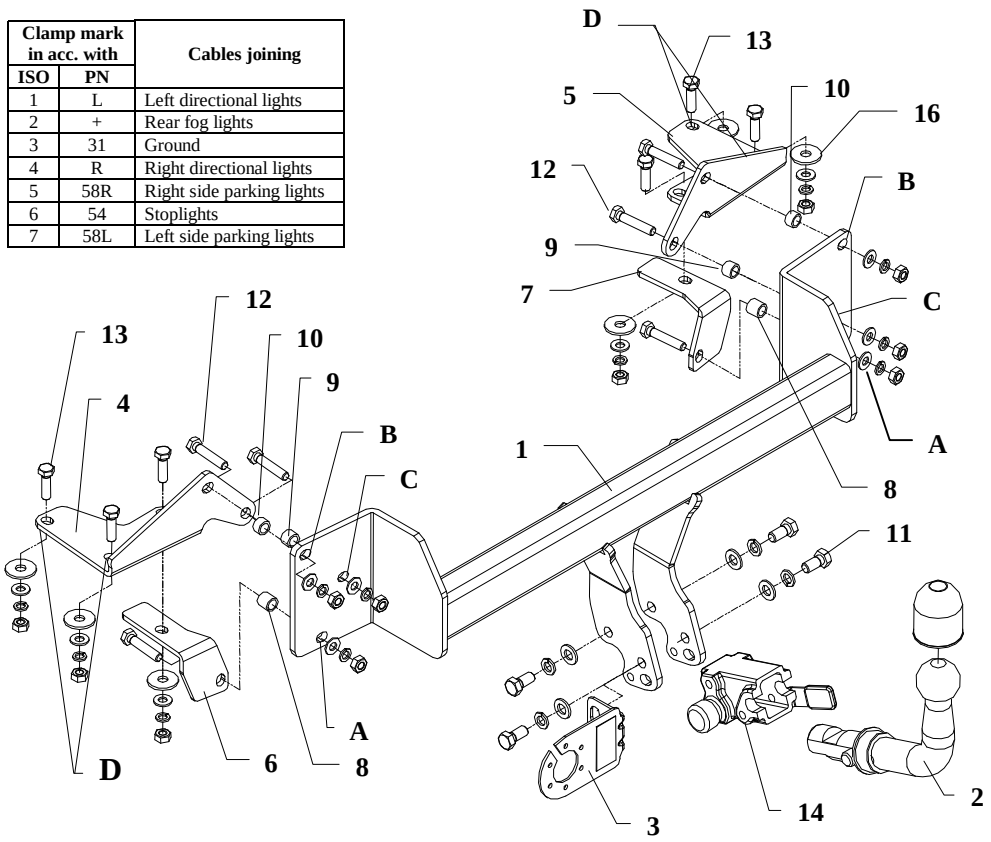

This towbar is designed to assembly in following car: **SUZUKI LIANA** produced since 2001 till 2007, catalogue no. **W18A** and is prepared to tow trailers max total weight **1200 kg** and max vertical load **60 kg.**

From manufacturer

Thank you for buying our product. Their reliability has been confirmed in many tests. Reliability of towbar depends also on correct assembly and right operation. For this reasons we kindly ask to read carefully this instruction and apply to hints.

The towbar should be install in points described by a car producer.

The instruction of the assembly

1. Disassemble the bumper and brackets.
2. Get out the spare wheel.
3. From the boot take out the carpet and cover panels (side and rear).
4. To rear part of the car put bar of the towbar (pos. 1) – holes pos. A agree with original holes
   - mark points through holes B and C (put away the bar)
   - in marked holes drill holes using bit ø10,5 mm
5. Put the bar again and
   - through all holes put bolts M10x50mm (pos. 12) and fix with elements 4 and 5 (elements 4 and 5 put from the inside)
   Attention!!! Before fix, put distance sleeves! (see drawing)
6. Through holes pos. D in elements 4 and 5 drill holes using bit ø10,5mm and next fix with elements 6 and 7 (elements 6 and 7 put underneath the car) see drawing.
7. Reassemble the bumper after cut out (in axis) his fragment length 85 mm, width 55 mm.
8. Fix body of the automat (pos. 14) and the socket plate (pos. 3) using bolts M12x25mm (pos. 11) from accessories. Place tow-ball (pos. 2) according to supplied instruction.
9. Tighten all bolts according to the torque shown in the table.
10. Mount side panels (cut out fragments for bolt heads).
11. Connect electric wires according to the instruction of the car. (Recommend to make at authorized service station)
12. Complete paint layer damaged during installation.

Torque settings for nuts and bolts (8,8):

M 8	25 Nm	**M 10**	55 Nm
M 12	85 Nm	**M 14**	135 Nm

NOTE

After install the towbar you should get adequate registration in registration book (at authorised service station).The car should be equipment with:

- Indicators
- Tow mirrors

After 1000km of exploitation check all bolts and nuts. The ball of towbar must be always kept clear and conserve with a grease.

Towbar accessories:

Pos. 1 Name: Main bar Quantity: 1 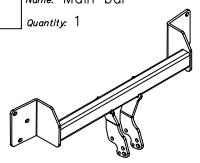	Pos. 6 Name: Left fish–plate Quantity: 1 	Pos. 12 Name: Bolt 8,8 B Quantity: 6 Dim. : M10x50mm 	Pos. 18 Name: Plain washer Quantity: 12 Dim. : ø 10,5 mm 
	Pos. 7 Name: Right fish–plate Quantity: 1 	Pos. 13 Name: Bolt 8,8 B Quantity: 6 Dim. : M10x35mm 	Pos. 19 Name: Spring washer Quantity: 4 Dim. : ø 12,2 mm 
Pos. 2 Name: Tow ball Quantity: 1 	Pos. 8 Name: Distance sleeve Quantity: 2 Dim. : ø17,2x2.35mm L=16mm 	Pos. 14 Name: Korpus automatu Quantity: 1 	Pos. 20 Name: Spring washer Quantity: 4 Dim. : ø 10,2 mm 
Pos. 3 Name: Socket plate Quantity: 1 	Pos. 9 Name: Distance sleeve Quantity: 2 Dim. : ø17,2x2.35mm L=12mm 	Pos. 15 Name: Nut 8 B Quantity: 12 Dim. : M10 	Pos. 21 Name: Ball cover Quantity: 1 
Pos. 4 Name: Left bracket Quantity: 1 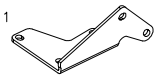	Pos. 10 Name: Distance sleeve Quantity: 2 Dim. : ø17,2x2.35mm L=10mm 	Pos. 16 Name: Washer Quantity: 6 Dim. : ø35xø12x4mm 	Pos. 22 Name: Body plug Quantity: 1 
Pos. 5 Name: Right bracket Quantity: 1 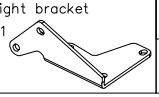	Pos. 11 Name: Bolt 8,8 B Quantity: 4 Dim. : M12x25mm 	Pos. 17 Name: Plain washer Quantity: 4 Dim. : ø 13 mm 	

PPUH AUTO-HAK S.J.

Produkcja Zaczepów Kulowych
Henryk & Zbigniew Nejman
76-200 SŁUPSK ul. Słoneczna 16K
tel/fax (059) 8-414-414; 8-414-413
E-mail: office@autohak.com.pl
www. autohak.com.pl

Towing hitch (without electrical set)

Class: **A50-X** Cat. no. **W18A**
Designed for:
Manufacturer: **SUZUKI**
Model: **LIANA**
produced since 2001 till 2007

Technical data:
D-value: **6,9 kN**
maximum trailer weight: **1200 kg**
maximum vertical cup load: **60 kg**

Approval number according to Directive 94/20/EC: e20*94/20*1143*00

Foreword

This towbar is design according to rules of safety traffic regulations. The towing hitch is a safety component and must be installed only by qualified personnel. Any alteration or conversion to the towing hitch is prohibited and would lead to cancellation of design certification. Remove insulating compound and underseal from vehicle (if present) in the area of the matting surfaces of the towing hitch.
The vehicle manufacturer's specifications regarding trailer load and max. vertical cup load are decisive for driving, and values for the towing hitch cannot be exceeded.
D-value formula:

$$\frac{\text{Max trailer weight [kg]} \times \text{Max vehicle weight [kg]}}{\text{Max trailer weight [kg]} + \text{Max vehicle weight [kg]}} \times \frac{9{,}81}{1000} = D\ [\text{kN}]$$