FITTING INSTRUCTION

Clamp mark in acc. with		Cables joining
ISO	PN	
1	L	Left directional lights
2	+	Rear fog lights
3	31	Ground
4	R	Right directional lights
5	58R	Right side parking lights
6	54	Stoplights
7	58L	Left side parking lights

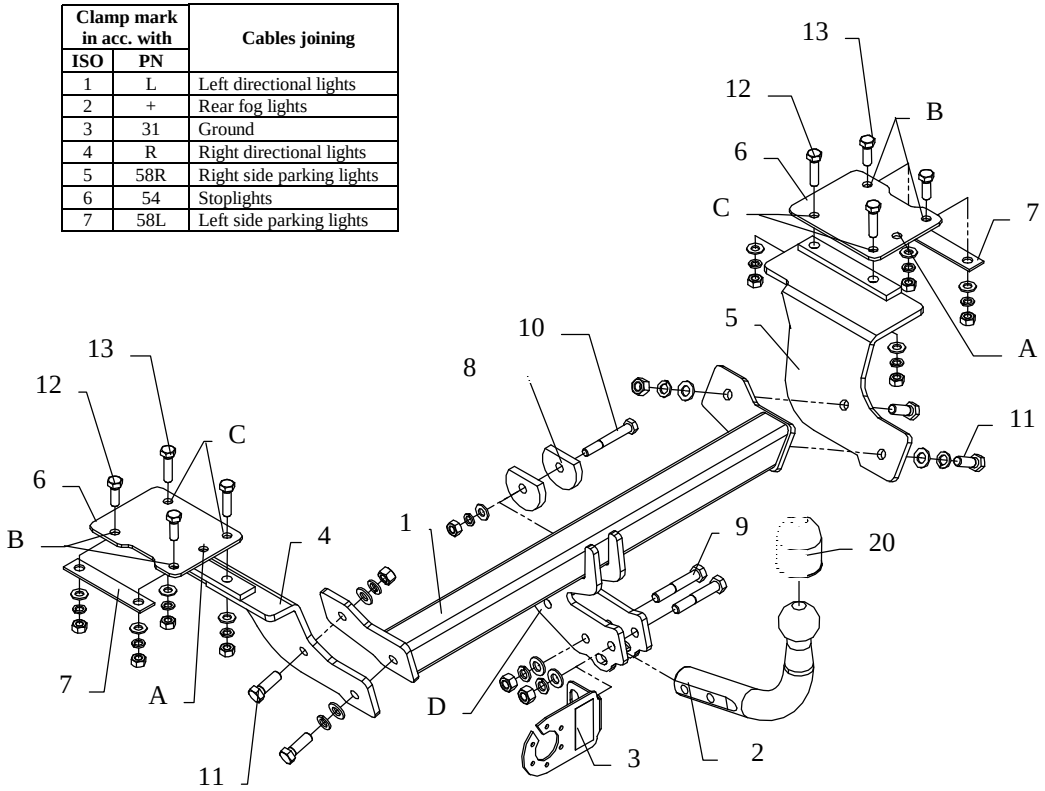

This towbar is designed to assembly in following cars: **SUZUKI SWIFT 3-5 doors,** produced since 1989 till 09.1996 and since 10.1996 till 2003, catalogue number **W13** and is prepared to tow trailers max total weight **1000 kg** and max vertical load **50 kg.**

From manufacturer

Thank you for buying our product. Their reliability has been confirmed in many tests. Reliability of towbar depends also on correct assembly and correct exploitation. For this reasons we kindly ask to read carefully this instruction and apply to hints.

The towbar should be install in points described by a car producer.

The instruction of the assembly

1. Disassemble the bumper.
2. Take out the noise mat from the boot.

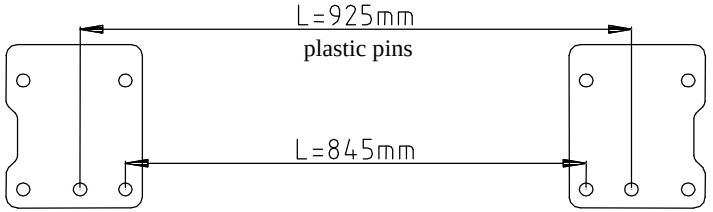

Fig.2 Element's distance

3. On the left and right side in the boot are plastic pins (diameter 11mm). On this pins put elements pos. 6 (pins in pos. A hole) – see fig. 2. Next drill holes through holes pos. 2 and 3, use bit Ø11 mm, drill straight through.
4. Put bolts M10x40 through holes(pos. C in element pos. 6 and next from below of car sandwich element pos. 4 from the left side (screw loosely), from the right side sandwich element pos. 5 (screw loosely too).
   - to easier install get lower the muffler (take off from rubber handles)
5. Through holes pos. B (in elements pos. 6) put bolts M10x30 and screw it with floor and element pos. 7.
6. In this way prepared elements (pos. 4 and 5) put main bar of the towbar (pos. 1) and fix it using bolts M12x30 (loosely).
7. Through holes pos. D fix with original tow handle using distance plain washers Ø58xØ12x6 pos. 8.
8. Fix all bolts according to the torque shown in the table.
9. Reassemble the bumper after cut out required fragment in bottom edge.
10. Fix tow-ball (pos. 2) and socket plate (pos. 3) using bolts M12 x 70mm (pos. 9) from equipment.
11. Connect electric wires according to the instruction of the car. (Recommend to make at authorized service station)
12. Complete the paint coating damaged during installation.

Torque settings for nuts and bolts (8,8):	
M 8 - 25 Nm	**M 10 -** 55 Nm
M 12 - 85 Nm	**M 14 -** 135 Nm

NOTE

After install the towbar you should get adequate note in registration book (at authorised service station).The car should be equipped with:

- Indicators
- Tow mirrors

After 1000km check all bolts and nuts. The ball of towbar must be always kept clear and conserve with a grease.

Towbar equipment:

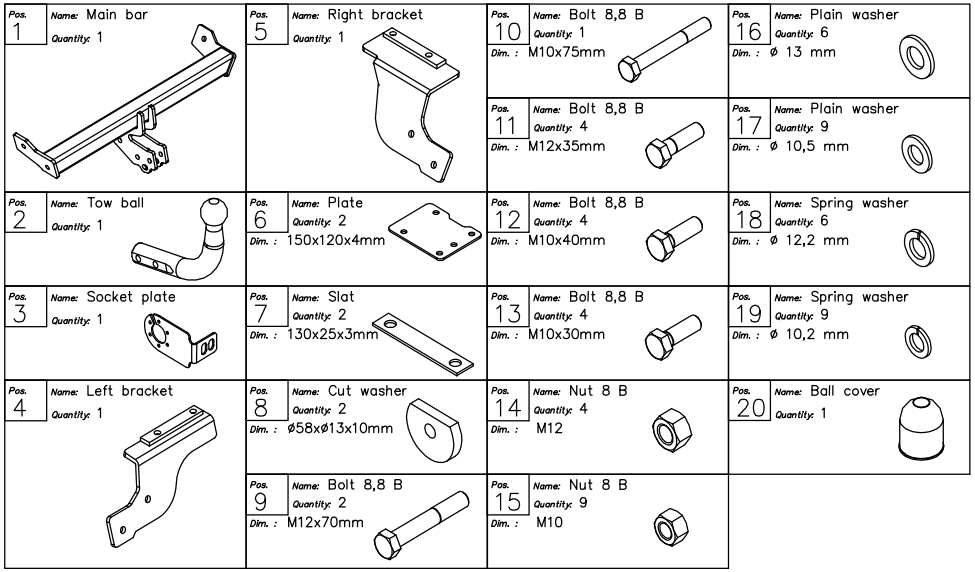

PPUH AUTO-HAK S.J.

Produkcja Haków Holowniczych
Henryk & Zbigniew Nejman
76-200 SŁUPSK ul. Słoneczna 16K
tel/fax (059) 8-414-414; 8-414-413
E-mail: office@autohak.com.pl
www. autohak.com.pl

Towing hitch (without electrical set)

Class: **A50-X** Cat. no. **W13**
Designed for:
Manufacturer: **SUZUKI**
Model: **SWIFT**
Type: **3-5 doors**
produced since 1989 till 09.1996 and
since 10.1996 till 2003

Technical data:
D-value: **5,45 kN**
maximum trailer weight: **1000 kg**
maximum vertical cup load: **50 kg**

Approval number acc. to regulations EKG/ONZ 55.01: E20-55R-01 1028

Foreword

This towbar is designed according to rules of safety traffic regulations. The towing hitch is a safety component and can be install only by qualified personnel. Any alteration or conversion of the towing hitch is prohibited and would lead to cancellation of design certification. Remove insulating compound and underseal from vehicle (if present) in the area of the matting surfaces of the towing hitch.
The vehicle manufacturer's specifications regarding trailer load and max. vertical cup load are decisive for driving, and values for the towing hitch cannot be exceeded.
D-value formula:

$$\frac{\text{Max trailer weight [kg]} \times \text{Max vehicle weight [kg]}}{\text{Max trailer weight [kg]} + \text{Max vehicle weight [kg]}} \times \frac{9{,}81}{1000} = D\ [\text{kN}]$$