Towbar accessories:

Pos. 1 Main bar PCS.: 1 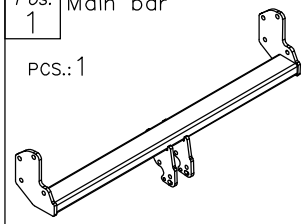	Pos. 4 Right bracket PCS.: 1 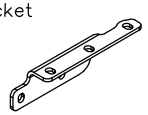	Pos. 8 Nut 8 B M12 PCS.: 4 
	Pos. 5 Left bracket PCS.: 1 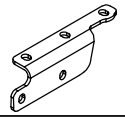	Pos. 9 Plain washer ø13mm PCS.: 14 
Pos. 2 Tow ball (mounting set) PCS.: 1 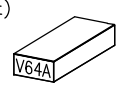	Pos. 6 Bolt 8.8 B M12x40mm PCS.: 4 	Pos. 10 Spring washer ø12,2mm PCS.: 14 
Pos. 3 Socket plate PCS.: 1 	Pos. 7 Bolt 8.8 B M12x1.25x40mm PCS.: 10 	

PPUH AUTO-HAK Sp.J.

Produkcja Zaczepów Kulowych
Henryk & Zbigniew Nejman
76-200 SŁUPSK ul. Słoneczna 16K
tel/fax (059) 8-414-414; 8-414-413
E-mail: office@autohak.com.pl
www. autohak.com.pl

Towing hitch (without electrical set)

Class: **A50-X** Cat. no. **V64A**
Designed for:
Manufacturer: **NISSAN**
Model: **NAVARA (D40)**
with step bumper
produced since 05.2005

Technical data:
D-value: **14,5 kN**
maximum trailer weight: **3000 kg**
maximum vertical cup load: **120 kg**

Approval number according to Directive 94/20/EC: e20*94/20*1045*00

Foreword

This towbar is designed according to rules of safety traffic regulations. The towing hitch is a safety component and can be install only by qualified personnel. Any alteration or conversion of the towing hitch is prohibited and would lead to cancellation of design certification. Remove insulating compound and underseal from vehicle (if present) in the area of the matting surfaces of the towing hitch.
The vehicle manufacturer's specifications regarding trailer load and max. vertical cup load are decisive for driving whereat values for the towing hitch cannot be exceeded.
D-value formula:

$$\frac{\text{Max trailer weight [kg]} \times \text{Max vehicle weight [kg]}}{\text{Max trailer weight [kg]} + \text{Max vehicle weight [kg]}} \times \frac{9{,}81}{1000} = D\ [\text{kN}]$$

FITTING INSTRUCTION

Clamp mark in acc. with		Cables joining
ISO	PN	
1	L	Left directional lights
2	+	Rear fog lights
3	31	Ground
4	R	Right directional lights
5	58R	Right side parking lights
6	54	Stoplights
7	58L	Left side parking lights

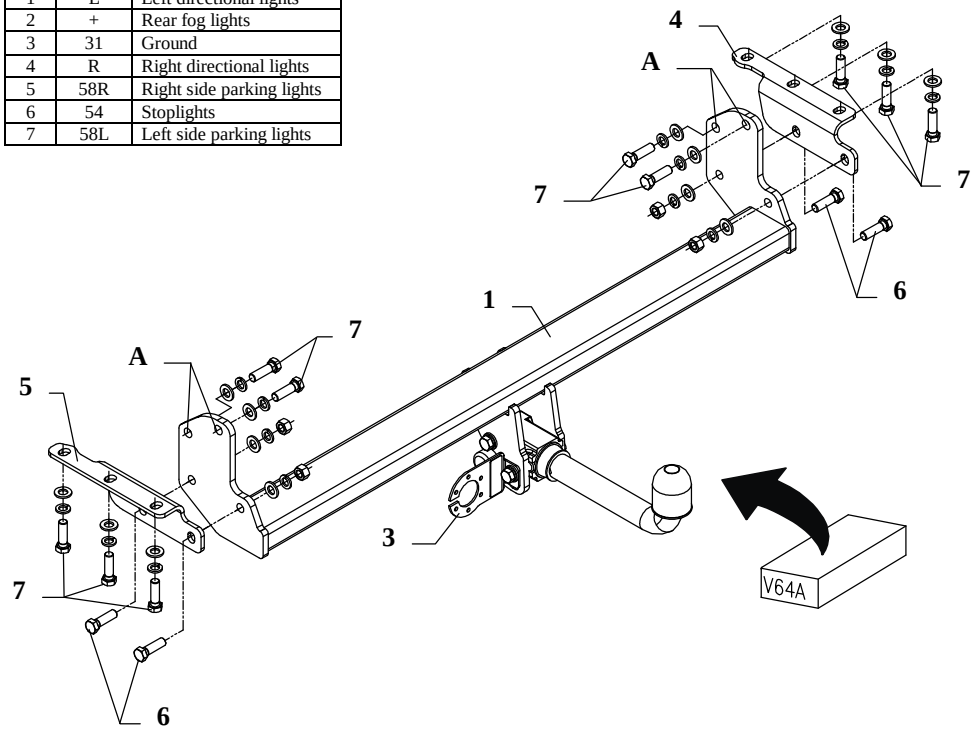

This towbar is designed to assembly in following cars: **NISSAN NAVARA (D40) with step bumper,** produced since 05.2005, catalogue no. **V64A** and is prepared to tow trailers max total weight **3000 kg** and max vertical load **120 kg**.

From manufacturer

Thank you for buying our product. Their reliability has been confirmed in many tests. Reliability of towbar depends also on correct assembly and right operation. For this reasons we kindly ask to read carefully this instruction and apply to hints.

The towbar should be install in points described by a car producer.

The instruction of the assembly

1. Underneath the car (from the left side) disassemble the original towing eye (will not be assembled again).
2. Fix the main bar of the towbar (pos. 1) to chassis members through holes (pos. A) using bolts M12x1,25x40mm (pos. 7).
3. Fix side brackets (pos. 4 and 5) to chassis members through original, threaded holes (from the bottom) using bolts M12x1,25x40mm (pos. 7) – see the drawing.
4. Fix the main bar of the towbar (pos. 1) with brackets (pos. 4 and 5) using bolts M12x40mm (pos. 6) as shown on the drawing.
5. Fix body of the automat and the socket plate (pos. 3) using bolts M12x25mm from accessories. Place tow-ball according to supplied instruction.
6. Connect electric wires of 7-poles socket according to the instruction of the car. (Recommend to make at authorized service station).
7. Complete paint layer damaged during installation.

Torque settings for nuts and bolts (8,8):		
M6 - 11 Nm	**M8 -** 25 Nm	**M10 -** 50 Nm
M12 - 87 Nm	**M14 -** 138 Nm	**M16 -** 210 Nm

NOTE

After install the towbar you should get adequate note in registration book (at authorised service station).The car should be equipped with:

- Indicators
- Tow mirrors

After 1000km of exploitation check all bolts and nuts. The ball of towbar must be always kept clear and conserve with a grease.