FITTING INSTRUCTION

Clamp mark in acc. with		Cables joining
ISO	PN	
1	L	Left directional lights
2	+	Rear fog lights
3	31	Ground
4	R	Right directional lights
5	58R	Right side parking lights
6	54	Stoplights
7	58L	Left side parking lights

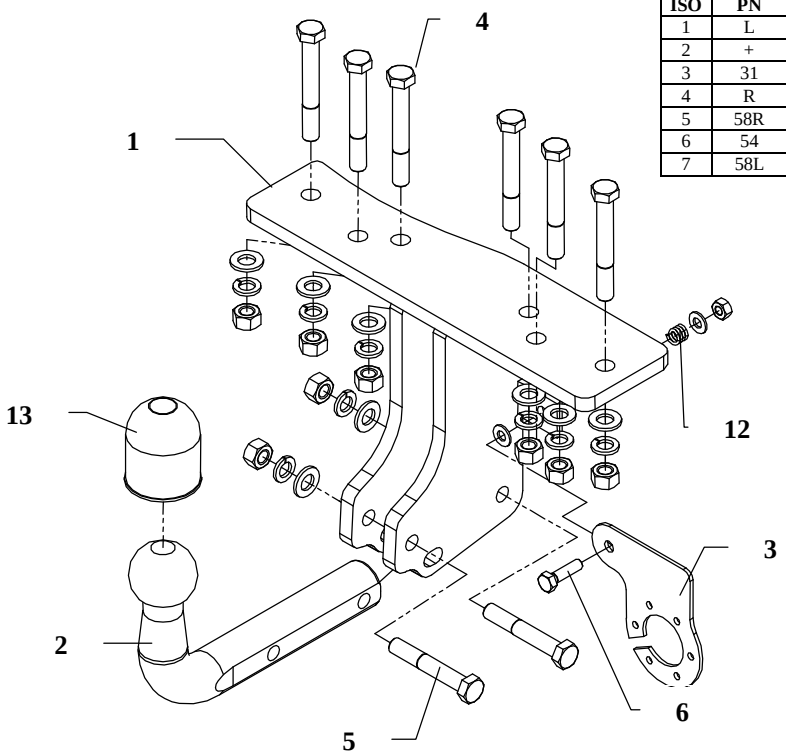

Fig. 1

This towbar is designed to assembly in following cars: **NISSAN PATHFINDER,** produced since 2005, catalogue number**V61** and is prepared to tow trailers max total weight **3000 kg** and max vertical load **100 kg**.

From manufacturer

Thank you for buying our product. Their reliability has been confirmed in many tests. Reliability of towbar depends also on correct assembly and correct exploitation. For this reasons we kindly ask to read carefully this instruction and apply to hints.

The towbar should be install in points described by a car producer.

The instruction of the assembly

1. Take out the spare wheel.
2. Unscrew original bar (pos. A, fig. 3) from chassis frame.
3. Fix main bar of the towbar (pos. B, fig. 3) to unscrewed bar (pos. A, fig. 3) using bolts M12x90mm (pos. 4).
4. In lower part of bumper cut out small fragments, see figure 2.

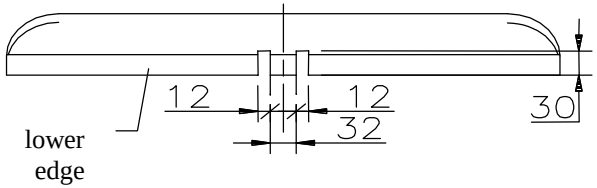

Fig. 2

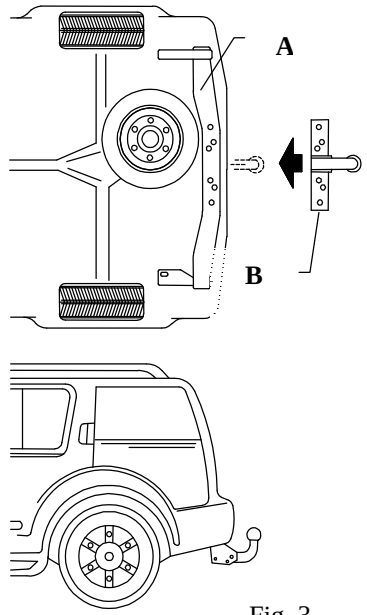

Fig. 3

5. Reinstall bar (pos. A, fig. 3) to chassis members.
6. Fix tow-ball (pos. 2) using bolts M12x75mm (pos. 5) from accessories.
7. Fix the socket plate (pos. 3) as shown on the fig. 1.
8. Tighten all bolts according to the torque shown in the table.
9. Connect electric wires of 7-poles socket according to the instruction of the car. (Recommend to make at authorized service station)
10. Complete paint layer damaged during installation.

Torque settings for nuts and bolts (8,8):	
M 8 - 25 Nm	**M 10** - 55 Nm
M 12 - 85 Nm	**M 14 -** 135 Nm

NOTE

After install the towbar you should get adequate note in registration book (at authorised service station).The car should be equipped with:

- Indicators
- Tow mirrors

After 1000km check all bolts and nuts. The ball of towbar must be always kept clear and conserve with a grease.

Towbar accessories:

Poz. 1 — Nazwa: Main bar; Ilość szt: 1 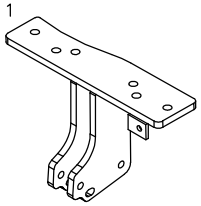	Poz. 5 — Nazwa: Bolt 8,8 B; Ilość szt: 2; Wymiar: M12x75mm 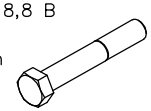	Poz. 10 — Nazwa: Plain washer; Ilość szt: 2; Wymiar: Ø 8,5 mm 
	Poz. 6 — Nazwa: Bolt 8,8 B; Ilość szt: 1; Wymiar: M8x30mm 	Poz. 11 — Nazwa: Spring washer; Ilość szt: 8; Wymiar: Ø 12,2 mm 
Poz. 2 — Nazwa: Tow ball; Ilość szt: 1 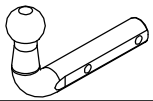	Poz. 7 — Nazwa: Nut 8 B; Ilość szt: 8; Wymiar: M12 	Poz. 12 — Nazwa: Compression springs; Ilość szt: 1 
Poz. 3 — Nazwa: Socket plate; Ilość szt: 1 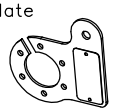	Poz. 8 — Nazwa: Nut 8 B; Ilość szt: 1; Wymiar: M8 	Poz. 13 — Nazwa: Ball cover; Ilość szt: 1 
Poz. 4 — Nazwa: Bolt 8,8 B; Ilość szt: 6; Wymiar: M12x90mm 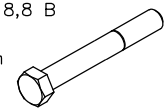	Poz. 9 — Nazwa: Plain washer; Ilość szt: 8; Wymiar: Ø 13 mm 	

PPUH AUTO-HAK S.J.

Produkcja Haków Holowniczych
Henryk & Zbigniew Nejman
76-200 SŁUPSK ul. Słoneczna 16K
tel/fax (059) 8-414-414; 8-414-413
E-mail: office@autohak.com.pl
www. autohak.com.pl

Towing hitch (without electrical set)

Class: **A50-X** Cat. no. **V61**
Designed for:
Manufacturer: **NISSAN**
Model: **PATHFINDER**
produced since 2005

Technical data:
D-value: **14,41 kN**
maximum trailer weight: **3000 kg**
maximum vertical cup load: **100 kg**

Approval number acc. to regulations EKG/ONZ 55.01: E20-55R-01 1741

Foreword

This towbar is designed according to rules of safety traffic regulations. The towing hitch is a safety component and can be install only by qualified personnel. Any alteration or conversion of the towing hitch is prohibited and would lead to cancellation of design certification. Remove insulating compound and underseal from vehicle (if present) in the area of the matting surfaces of the towing hitch.
The vehicle manufacturer's specifications regarding trailer load and max. vertical cup load are decisive for driving whereat values for the towing hitch cannot be exceeded.
D-value formula:

$$\frac{\text{Max trailer weight [kg]} \times \text{Max vehicle weight [kg]}}{\text{Max trailer weight [kg]} + \text{Max vehicle weight [kg]}} \times \frac{9{,}81}{1000} = D\ [\text{kN}]$$