PPUH AUTO-HAK Sp.J.

Produkcja Zaczepów Kulowych
Henryk & Zbigniew Nejman
76-200 SŁUPSK ul. Słoneczna 16K
tel/fax (059) 8-414-414; 8-414-413
E-mail: office@autohak.com.pl
www.autohak.com.pl

Towing hitch (without electrical set)

Class: **A50-X** Cat. no. **V56**
Designed for:
Manufacturer: **NISSAN**
Model: **PRIMERA**
Type: **4/5 doors (P12)**
produced since 03.2002

Technical data:
D-value: **8,3 kN**
maximum trailer weight: **1500 kg**
maximum vertical cup mass: **75 kg**

Approval number acc. to regulations EKG/ONZ 55.01: E20-55R-01 1107

Foreword

This towing hitch is designed according to rules of safety traffic regulations. The towing hitch is a safety component and can be install only by qualified personnel. Any alteration or conversion of the towing hitch is prohibited and would lead to cancellation of design certification. Remove insulating compound and underseal from vehicle (if present) in the area of the matting surfaces of the towing hitch.
The vehicle manufacturer's specifications regarding trailer mass and max. vertical cup mass are decisive for driving whereat values for the towing hitch cannot be exceeded.
D-value formula:

$$\frac{\text{Max trailer weight [kg]} \times \text{Max vehicle weight [kg]}}{\text{Max trailer weight [kg]} + \text{Max vehicle weight [kg]}} \times \frac{9{,}81}{1000} = D\ [\text{kN}]$$

FITTING INSTRUCTION

Clamp mark in acc. with		Cables joining
ISO	PN	
1	L	Left directional lights
2	+	Rear fog lights
3	31	Ground
4	R	Right directional lights
5	58R	Right side parking lights
6	54	Stoplights
7	58L	Left side parking lights

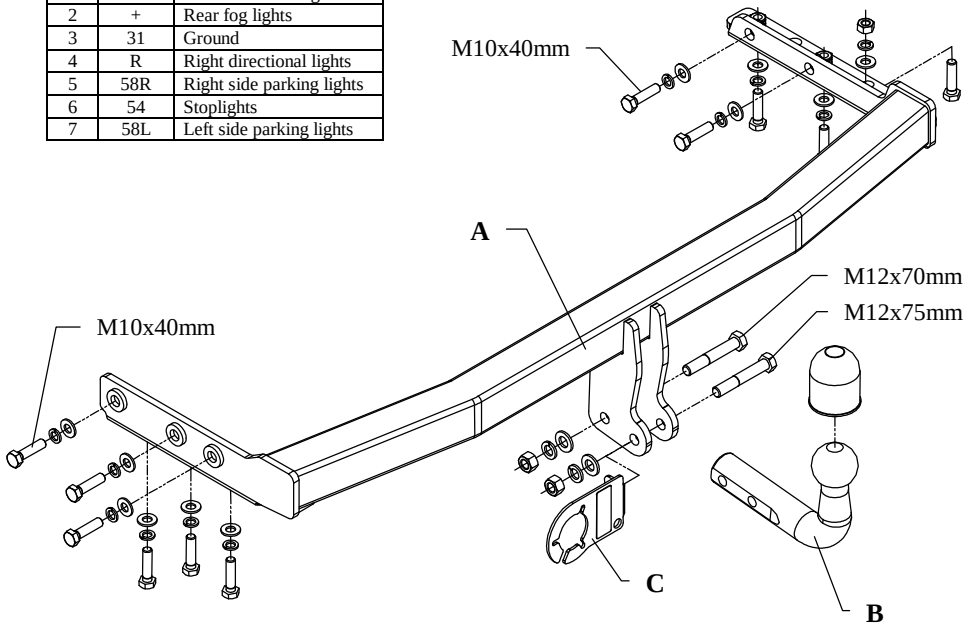

This towbar is designed to assembly in following car:
NISSAN PRIMERA, 4/5 doors (P12) produced since 03.2002, catalogue no. **V56** and is prepared to tow trailers max total weight **1500 kg** and max vertical load **75 kg**.

Foreword

Thank you for buying our product. This towbar is design according to rules of safety traffic regulations and their reliability has been confirmed in many tests. Reliability of towbar also depends on correct assembly and correct exploitation. For this reasons we kindly ask to read carefully this instruction and apply to hints.

The towbar should be install in places described by a car producer.

Fitting instructions

1. To mount this towbar it is necessary to disassemble the bumper and muffler.
2. Unscrew original tow handle (not used any more).
3. Slip bar of the towbar (pos. A) to chassis members and screw using bolts M10x40 mm as shown in the fig. 1.
4. Assemble the muffler and bumper (after cut out his fragment), see fig. 2.

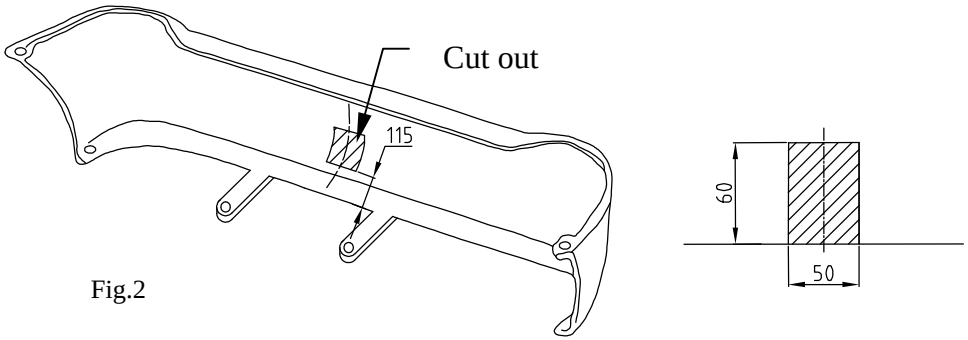

Fig.2

5. Fix tow-ball (pos. B) and socket plate (pos. C) using bolts M12x75mm and M12x70mm from equipment.
6. Tighten all bolts according to the torque shown in the table.
7. Connect electric wires of 7-poles socket according to the instruction of the car. (Recommend to make at authorized service station)
8. Supplement the paint coating damaged during assembly.

Torque settings for nuts and bolts (8,8):		
M6 - 11 Nm	**M 8 -** 25 Nm	**M 10 -** 50 Nm
M 12 - 87 Nm	**M 14 -** 138 Nm	**M16** - 210 Nm

NOTE

After install the towbar you should get adequate registration in registration book (at authorised service station).The car should be equipped with:

- Trafficators
- Tow mirrors

After 1000km of exploitation check all bolts and nuts. The ball of towbar must be always kept clear and conserve with a grease.