Towbar accessories:

Pos. 1 Main bar PCS.: 1 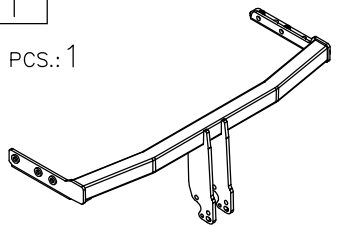	Pos. 4 Bolt 8,8 B M10x40mm PCS.: 11 
	Pos. 5 Plain washer ø10,5mm PCS.: 11 
Pos. 2 Tow ball (mounting set) PCS.: 1 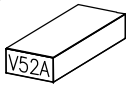	Pos. 6 Spring washer ø10,2mm PCS.: 11 
Pos. 3 Socket plate PCS.: 1 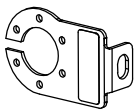	Pos. 7 Nut 8 B M10 PCS.: 1 

PPUH AUTO-HAK S.J.

Produkcja Haków Holowniczych
Henryk & Zbigniew Nejman
76-200 SŁUPSK ul. Słoneczna 16K
tel/fax (059) 8-414-414; 8-414-413
E-mail: office@autohak.com.pl
www.autohak.com.pl

Towing hitch (without electrical set)

Class: **A50-X** Cat. no. **V52A**
Designed for:
Manufacturer: **NISSAN**
Model: **PRIMERA**
Type: **ESTATE W12**
produced since 2002

Technical data:
D-value: **8,30 kN**
maximum trailer weight: **1500 kg**
maximum vertical cup load: **75 kg**

Approval number according to Directive 94/20/EC: e20*94/20*1069*00

Foreword

This towbar is designed according to rules of safety traffic regulations. The towing hitch is a safety component and can be install only by qualified personnel. Any alteration or conversion of the towing hitch is prohibited and would lead to cancellation of design certification. Remove insulating compound and underseal from vehicle (if present) in the area of the matting surfaces of the towing hitch.
The vehicle manufacturer's specifications regarding trailer load and max. vertical cup load are decisive for driving, and values for the towing hitch cannot be exceeded.
D-value formula:

$$\frac{\text{Max trailer weight [kg]} \times \text{Max vehicle weight [kg]}}{\text{Max trailer weight [kg]} + \text{Max vehicle weight [kg]}} \times \frac{9{,}81}{1000} = D\ [\text{kN}]$$

FITTING INSTRUCTION

Clamp mark in acc. with		Cables joining
ISO	PN	
1	L	Left directional lights
2	+	Rear fog lights
3	31	Ground
4	R	Right directional lights
5	58R	Right side parking lights
6	54	Stoplights
7	58L	Left side parking lights

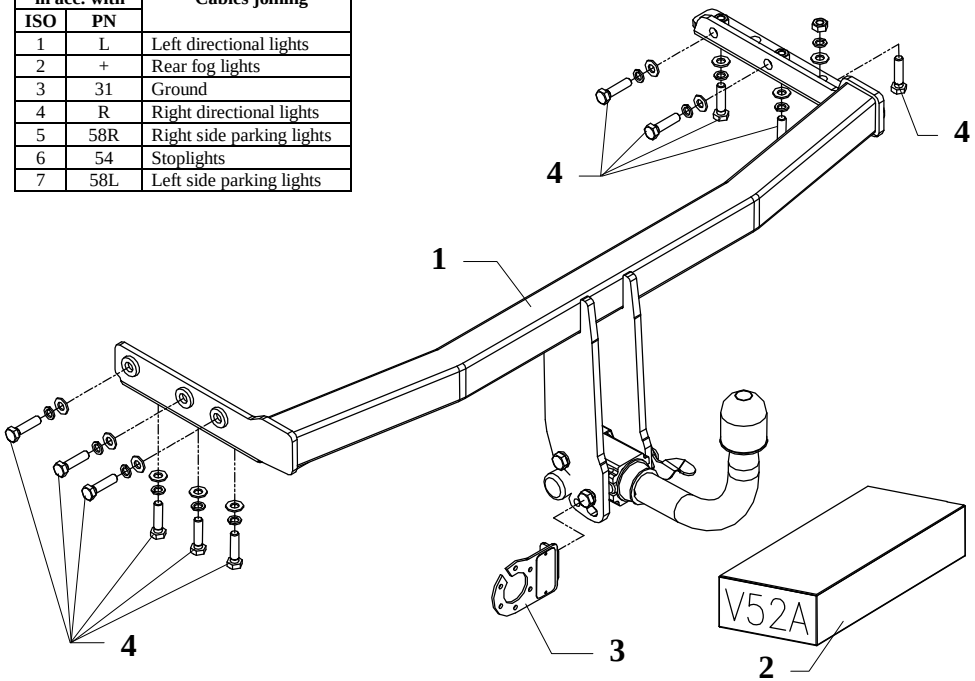

Fig. 1

This towbar is designed to assembly in following cars: **NISSAN PRIMERA ESTATE (W12)** produced since 2002, catalogue no. **V52A** and is prepared to tow trailers max total weight **1500 kg** and max vertical load **75 kg**.

From manufacturer

Thank you for buying our product. Their reliability has been confirmed in many tests. Reliability of towbar depends also on correct assembly and right operation. For this reasons we kindly ask to read carefully this instruction and apply to hints.

The towbar should be install in points described by a car producer.

Fitting instructions

1. Disassemble the bumper and silencer.
2. Disassemble the towing eye (this part will not used any more).
3. Slide the main bar of towbar (pos. 1) to the chassis members and fix it using M10x40mm – pos. 4 (see fig. 1).
4. Cut the bumper (see fig.2).
5. Reassemble the silencer and bumper.
6. Tighten all nuts and bolts according to the torque shown in the table.
7. Fix body of the automat and the socket plate (pos. 3) using bolts M12 from accessories. Place tow-ball (pos. 2) according to supplied instruction.
8. Connect the electric wires according to the instructions of the car.
9. Complete the paint cover of towbar (during the mounting paint cover could be destroyed).

Torque settings for nuts and bolts (8,8):	
M 8 - 25 Nm	**M 10 -** 55 Nm
M 12 - 85 Nm	**M 14 -** 135 Nm

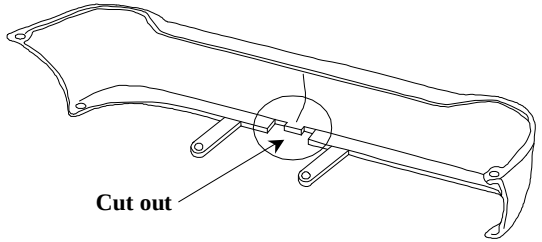

Fig. 2

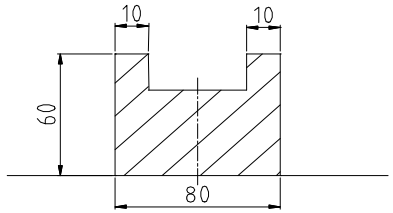

NOTE

After install the towbar you should get adequate note in registration book (at authorised service station).The car should be equipped with:

- Indicators
- Tow mirrors

After 1000km check all bolts and nuts. The ball of towbar must be always kept clear and conserve with a grease.