FITTING INSTRCUTION

Clamp mark in acc. with		Cables joining
ISO	PN	
1	L	Left directional lights
2	+	Rear fog lights
3	31	Ground
4	R	Right directional lights
5	58R	Right side parking lights
6	54	Stoplights
7	58L	Left side parking lights

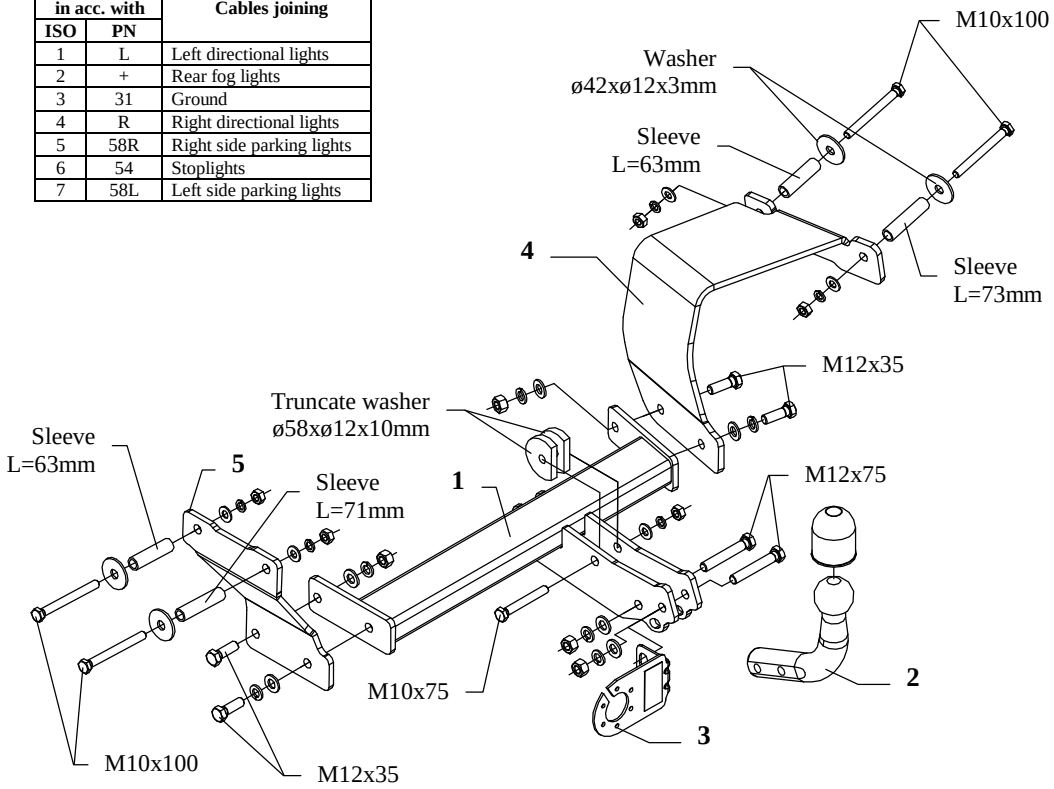

This towing hitch is designed to assembly in following cars: **NISSAN MICRA, 3/5 doors (K11),** produced since 08.1992 till 2002, catalogue no. **V50** and is prepared to tow trailers max total weight **1150 kg** and max vertical load **50 kg**.

From manufacturer

Thank you for buying our product. Their reliability has been confirmed in many tests. Reliability of towing hitch depends also on correct assembly and right operation. For this reasons we kindly ask to read carefully this instruction and apply to hints.

The towing hitch should be install in points described by a car producer.

The instruction of the assembly

1. Disassemble the muffler.
2. Slip distance sleeves into factory-made holes in chassis members, as shown on the drawing. Then put the bolts M10x100mm (pos. 13) through them together with washers (pos. 9).
3. To so prepared places fix loosely brackets of the towing hitch: (pos. 5) – left side and (pos. 4) – right side.
4. Slip the main bar of the towing hitch (pos. 1) between brackets (pos. 4 and 5) and fix using bolts M12x35mm (pos. 12) and bolt M10x75mm (pos. 14) to factory towing eye (use truncate washers – pos. 10) – see drawing.
5. Reassemble the muffler.
6. Fix tow-ball (pos. 2) with socket plate (pos. 3) using bolts M12x75mm (pos. 11) from accessories.
7. Tighten all bolts according to the torque shown in the table.
8. Connect electric wires of 7-poles socket according to the instruction of the car. (Recommend to make at authorized service station).
9. Complete paint layer damaged during installation.

Torque settings for nuts and bolts (8,8):	
M 8 - 25 Nm	**M 10 -** 55 Nm
M 12 - 85 Nm	**M 14 -** 135 Nm

NOTE

After install the towing hitch you should get adequate note in registration book (at authorised service station).The car should be equipped with:

- Indicators
- Tow mirrors

After 1000km check all bolts and nuts. The ball of towing hitch must be always kept clear and conserve with a grease.

Towing hitch accessories:

Pos. 1 Name: Main bar Quantity: 1 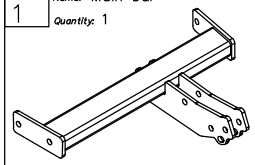	Pos. 5 Name: Left bracket Quantity: 1 	Pos. 10 Name: Truncate washer Quantity: 2 Dim. : ø58xø12x10mm 	Pos. 16 Name: Nut 8 B Quantity: 5 Dim. : M10 
Pos. 6 Name: Distance sleeve Quantity: 1 Dim. : ø17,2x2,35mm L=73mm 	Pos. 11 Name: Bolt 8,8 B Quantity: 2 Dim. : M12x75mm 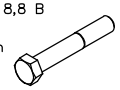	Pos. 17 Name: Plain washer Quantity: 6 Dim. : ø 13 mm 	
Pos. 2 Name: Tow ball Quantity: 1 	Pos. 7 Name: Distance sleeve Quantity: 1 Dim. : ø17,2x2,35mm L=71mm 	Pos. 12 Name: Bolt 8,8 B Quantity: 4 Dim. : M12x35mm 	Pos. 18 Name: Plain washer Quantity: 5 Dim. : ø 10,5 mm 
Pos. 3 Name: Socket plate Quantity: 1 	Pos. 8 Name: Distance sleeve Quantity: 2 Dim. : ø17,2x2,35mm L=63mm 	Pos. 13 Name: Bolt 8,8 B Quantity: 4 Dim. : M10x100mm 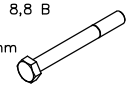	Pos. 19 Name: Spring washer Quantity: 6 Dim. : ø 12,2 mm 
Pos. 4 Name: Right bracket Quantity: 1 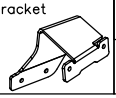	Pos. 9 Name: Washer Quantity: 4 Dim. : ø42xø12x3mm 	Pos. 14 Name: Bolt 8,8 B Quantity: 1 Dim. : M10x75mm 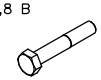	Pos. 20 Name: Spring washer Quantity: 5 Dim. : ø 10,2 mm 
		Pos. 15 Name: Nut 8 B Quantity: 4 Dim. : M12 	Pos. 21 Name: Ball cover Quantity: 1 

PPUH AUTO-HAK S.J.

Produkcja Zaczepów Kulowych
Henryk & Zbigniew Nejman
76-200 SŁUPSK ul. Słoneczna 16K
tel/fax (059) 8-414-414; 8-414-413
E-mail: office@autohak.com.pl
www. autohak.com.pl

Towing hitch (without electrical set)

Class: **A50-X** Cat. no. **V50**
Designed for:
Manufacturer: **NISSAN**
Model: **MICRA**
Type: **3/5 doors (K11)**
produced since 08.1992 till 2002

Technical data:
D-value: **6,23 kN**
maximum trailer weight: **1150 kg**
maximum vertical cup load: **50 kg**

Approval number according to Directive 94/20/EC: e20*94/20*0281*00

Foreword

This towing hitch is designed according to rules of safety traffic regulations. The towing hitch is a safety component and can be install only by qualified personnel. Any alteration or conversion of the towing hitch is prohibited and would lead to cancellation of design certification. Remove insulating compound and underseal from vehicle (if present) in the area of the matting surfaces of the towing hitch.
The vehicle manufacturer's specifications regarding trailer load and max. vertical cup load are decisive for driving whereat values for the towing hitch cannot be exceeded.
D-value formula:

$$\frac{\text{Max trailer weight [kg]} \times \text{Max vehicle weight [kg]}}{\text{Max trailer weight [kg]} + \text{Max vehicle weight [kg]}} \times \frac{9{,}81}{1000} = D\ [\text{kN}]$$