FITTING INSTRUCTION

Clamp mark in acc. with		Cables joining
ISO	PN	
1	L	Left directional lights
2	+	Rear fog lights
3	31	Ground
4	R	Right directional lights
5	58R	Right side parking lights
6	54	Stoplights
7	58L	Left side parking lights

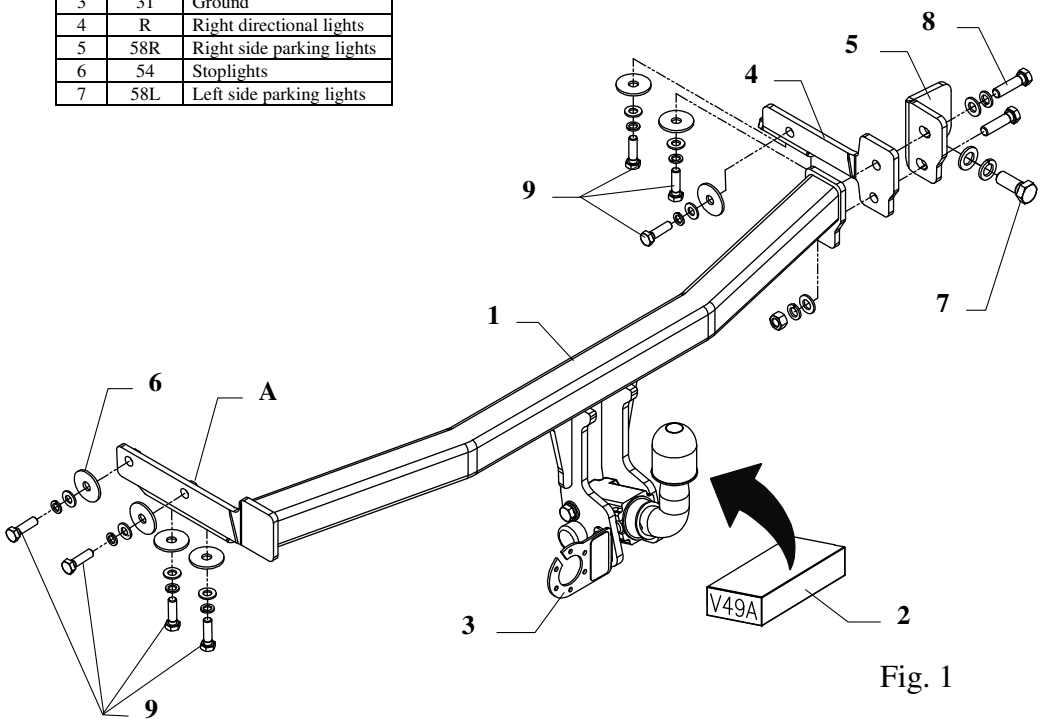

Fig. 1

This towbar is designed to assembly in following car: **NISSAN ALMERA, 3/5 door, (N16),** produced since 03.2000 till 2006, catalogue number **V49A** and is prepared to tow trailers max total weight **1500 kg** and max vertical load **75 kg**.

From manufacturer

Thank you for buying our product. Their reliability has been confirmed in many tests. Reliability of towbar depends also on correct assembly and right operation. For this reasons we kindly ask to read carefully this instruction and apply to hints.

The towbar should be install in points described by a car producer.

The instruction of the assembly

1. Disassemble the bumper and the muffler.
2. To right chassis member slide bracket (pos. 4) and screw loosely with bolts M10x35mm (pos. 9) through original holes.
3. Put main part of the towbar (pos. 1) (part A in left chassis member) and screw loosely with bolts M10x35 and screw all together with mounted bracket (pos. 4) and angle element (pos. 5) with bolts M12x45mm (pos. 8) as shown in the fig. 1.
4. Angle element (pos. 5) screw with bolt M16x40mm – pos. 7 (instead of original tow handle).
5. Reassemble the muffler and the bumper (after cut out his fragment) see fig. 2
6. Fix body of the automat and place tow-ball according to supplied instruction. Note! Remember to place socket plate (pos. 3) as shown on the drawing 1.
7. Screw all bolts according to the torque shown in the table.

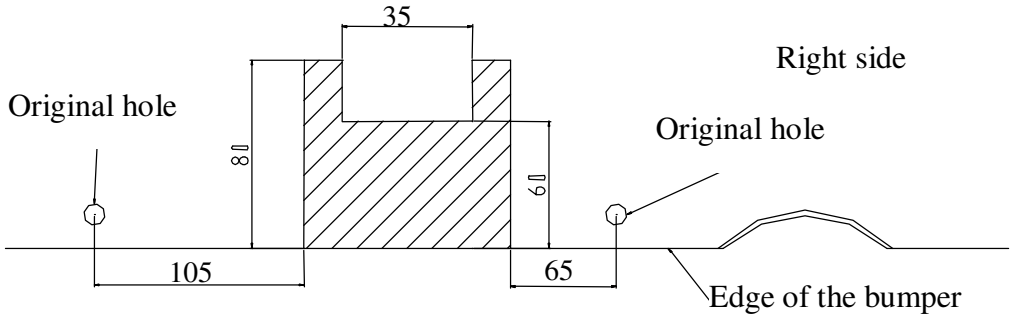

Fig.2

8. Connect electric wires according to the instruction of the car. (Recommend to make at authorized service station)
9. Complete the paint coating damaged during assembly.

Torque settings for nuts and bolts (8,8):	
M 8 - 25 Nm	**M 10 -** 55 Nm
M 12 - 85 Nm	**M 14 -** 135 Nm

NOTE

After install the towbar you should get adequate note in registration book (at authorised service station).The car should be equipped with:

- Indicators
- Tow mirrors

After 1000km of exploitation check all bolts and nuts. The ball of towbar must be always kept clear and conserve with a grease.

Towbar accessories:

Pos. 1 Main bar PCS.: 1 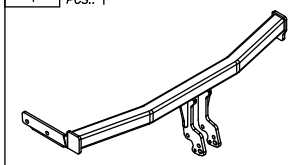	Pos. 5 Right bracket PCS.: 1 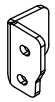	Pos. 11 Plain washer PCS.: 1 Dim. : ø 17 mm 
	Pos. 6 Washer PCS.: 7 Dim. : ø35xø12x3mm 	Pos. 12 Plain washer PCS.: 2 Dim. : ø 13 mm 
Pos. 2 Tow ball (mounting set) PCS.:1 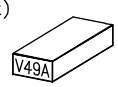	Pos. 7 Bolt 8,8 B PCS.: 1 Dim. : M16x40mm 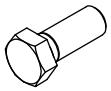	Pos. 13 Plain washer PCS.: 7 Dim. : ø 10,5 mm 
Pos. 3 Socket plate PCS.: 1 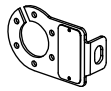	Pos. 8 Bolt 8,8 B PCS.: 2 Dim. : M12x45mm 	Pos. 14 Spring washer PCS.: 1 Dim. : ø 17 mm 
Pos. 4 Right bracket cpl. PCS.: 1 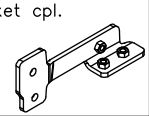	Pos. 9 Bolt 8,8 B PCS.: 7 Dim. : M10x35mm 	Pos. 15 Spring washer PCS.: 2 Dim. : ø 12,2 mm 
	Pos. 10 Nut 8 B PCS.: 1 Dim. : M12 	Pos. 16 Spring washer PCS.: 7 Dim. : ø 10,2 mm 

PPUH AUTO-HAK S.J.

Produkcja Zaczepów Kulowych
Henryk & Zbigniew Nejman
76-200 SŁUPSK ul. Słoneczna 16K
tel/fax (059) 8-414-414; 8-414-413
E-mail: office@autohak.com.pl
www. autohak.com.pl

Towing hitch (without electrical set)

Class: **A50-X** Cat. no. **V49A**
Designed for:
Manufacturer: **NISSAN**
Model: **ALMERA**
Type: **3/5 door, N16**
produced since 03.2000 till 2006

Technical data:
D-value: **8,0 kN**
maximum trailer weight: **1500 kg**
maximum vertical cup load: **75 kg**

Approval number according to Directive 94/20/EC: e20*94/20*1043*00

Foreword

This towbar is designed according to rules of safety traffic regulations. The towing hitch is a safety component and can be install only by qualified personnel. Any alteration or conversion of the towing hitch is prohibited and would lead to cancellation of design certification. Remove insulating compound and underseal from vehicle (if present) in the area of the matting surfaces of the towing hitch.
The vehicle manufacturer's specifications regarding trailer load and max. vertical cup load are decisive for driving, and values for the towing hitch cannot be exceeded.
D-value formula:

$$\frac{\text{Max trailer weight [kg]} \times \text{Max vehicle weight [kg]}}{\text{Max trailer weight [kg]} + \text{Max vehicle weight [kg]}} \times \frac{9{,}81}{1000} = D\ [\text{kN}]$$