FITTING INSTRUCTION

Clamp mark in acc. with		Cables joining
ISO	PN	
1	L	Left directional lights
2	+	Rear fog lights
3	31	Ground
4	R	Right directional lights
5	58R	Right side parking lights
6	54	Stoplights
7	58L	Left side parking lights

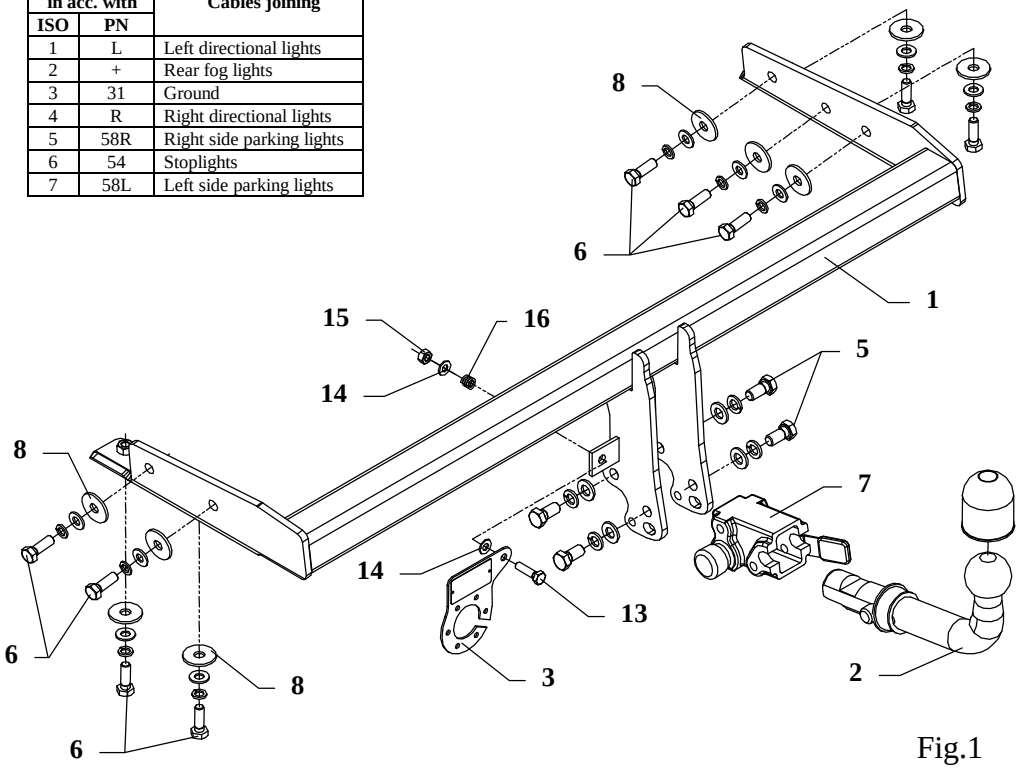

Fig.1

This towbar is designed to assembly in following car:
NISSAN ALMERA 4 door, N16, catalogue no. **V48A** produced since 03.2000 till 2006 and is prepared to tow trailers max total weight **1500 kg** and max vertical load **75 kg**.

From manufacturer

Thank you for buying our product. Their reliability has been confirmed in many tests. Reliability of towbar depends also on correct assembly and right operation. For this reasons we kindly ask to read carefully this instruction and apply to hints.

The towbar should be install in points described by a car producer.

The instruction of the assembly

1. To install our towbar You should disassemble the bumper and the muffler.
2. Unscrew two frame plugs in rear part of car and unscrew reinforcements from left chassis member (not used any more).
3. Slip main bar of towbar (pos. 1) to chassis member and fix with bolts M10x30mm (pos. 6) – see fig.1.
4. Reassemble the muffler and the bumper after cut out his fragment (see fig. 2).
5. Fix body of the automat (pos. 7) using bolts M12x25mm (pos. 5) from accessories. Place tow-ball (pos. 2) according to supplied instruction.
6. Fix the socket plate (pos. 3) as shown on the drawing.
7. Tighten all bolts according to the torque shown in the table.
8. Connect electric wires of 7-poles socket according to the instruction of the car. (Recommend to make at authorized service station).

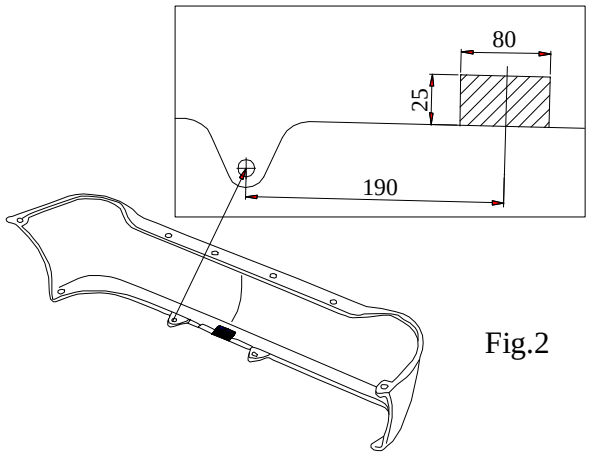

Fig.2

9. Complete paint layer damaged during installation.

Torque settings for nuts and bolts (8,8):	
M 8 - 25 Nm	**M 10 -** 55 Nm
M 12 - 85 Nm	**M 14 -** 135 Nm

NOTE

After install the towbar you should get adequate note in registration book (at authorised service station).The car should be equipped with:

- Indicators
- Tow mirrors

After 1000km check all bolts and nuts. The ball of towbar must be always kept clear and conserve with a grease.

Towbar accessories:

Pos. 1 Name: Main bar Quantity: 1 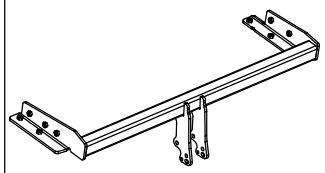	Pos. 6 Name: Bolt 8,8 B Quantity: 9 Dim. : M10x30mm 	Pos. 12 Name: Spring washer Quantity: 9 Dim. : ø 10,2 mm 
	Pos. 7 Name: Body of the automat Quantity: 1 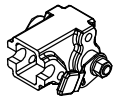	Pos. 13 Name: Bolt 8,8 B Quantity: 1 Dim. : M8x30mm 
Pos. 2 Name: Tow ball Quantity: 1 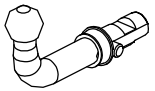	Pos. 8 Name: Washer Quantity: 9 Dim. : ø35xø12x4mm 	Pos. 14 Name: Plain washer Quantity: 2 Dim. : ø 8,5 mm 
Pos. 3 Name: Socket plate Quantity: 1 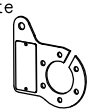	Pos. 9 Name: Plain washer Quantity: 4 Dim. : ø 13 mm 	Pos. 15 Name: Nut 8 B Quantity: 1 Dim. : M8 
Pos. 4 Name: Ball cover Quantity: 1 	Pos. 10 Name: Plain washer Quantity: 9 Dim. : ø 10,5 mm 	Pos. 16 Name: Spring Quantity: 1 
Pos. 5 Name: Bolt 8,8 B Quantity: 4 Dim. : M12x25mm 	Pos. 11 Name: Spring washer Quantity: 4 Dim. : ø 12,2 mm 	Pos. 17 Name: Body plug Quantity: 1 

PPUH AUTO-HAK S.J.

Produkcja Zaczepów Kulowych
Henryk & Zbigniew Nejman
76-200 SŁUPSK ul. Słoneczna 16K
tel/fax (059) 8-414-414; 8-414-413
E-mail: office@autohak.com.pl
www. autohak.com.pl

Towing hitch (without electrical set)

Class: **A50-X** Cat. no. **V48A**
Designed for:
Manufacturer: **NISSAN**
Model: **ALMERA**
Type: **4door, N16**
produced since 03.2000 till 2006

Technical data:
D-value: **8,0 kN**
maximum trailer weight: **1500 kg**
maximum vertical cup load: **75 kg**

Approval number according to Directive 94/20/EC: e20*94/20*1042*00

Foreword

This towbar is designed according to rules of safety traffic regulations. The towing hitch is a safety component and must be installed only by qualified personnel. Any alteration or conversion to the towing hitch is prohibited and would lead to cancellation of design certification. Remove insulating compound and underseal from vehicle (if present) in the area of the matting surfaces of the towing hitch.
The vehicle manufacturer's specifications regarding trailer load and max. vertical cup load are decisive for driving, and values for the towing hitch cannot be exceeded.
D-value formula:

$$\frac{\text{Max trailer weight [kg]} \times \text{Max vehicle weight [kg]}}{\text{Max trailer weight [kg]} + \text{Max vehicle weight [kg]}} \times \frac{9{,}81}{1000} = D\ [\text{kN}]$$