Towbar accessories:

Pos. 1 Main bar PCS.: 1 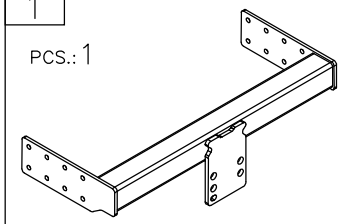	Pos. 5 Bolt 8,8 B M16x50mm PCS.: 2 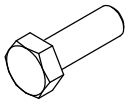	Pos. 10 Spring washer ø10mm PCS.: 20 
	Pos. 6 Bolt 8,8 B M10x35mm PCS.: 20 	Pos. 11 Nut 8 B M16 PCS.: 2 
Pos. 2 Tow ball PCS.: 1 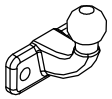	Pos. 7 Plain washer ø17mm PCS.: 2 	Pos. 12 Nut 8 B M10 PCS.: 20 
Pos. 3 Socket plate PCS.: 1 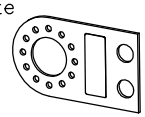	Pos. 8 Plain washer ø10mm PCS.: 20 	Pos. 13 Ball cover PCS.: 1 
Pos. 4 Side bracket PCS.: 2 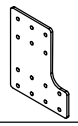	Pos. 9 Spring washer ø16,3mm PCS.: 2 	

PPUH AUTO-HAK Sp.J.

Produkcja Zaczepów Kulowych
Henryk & Zbigniew Nejman
76-200 SŁUPSK ul. Słoneczna 16K
tel/fax (059) 8-414-414; 8-414-413
E-mail: office@autohak.com.pl
www. autohak.com.pl

Towing hitch (without electrical set)

Class: **A50-X** Cat. no. **V22**
Designed for:
Manufacturer: **NISSAN**
Model: **CABSTAR E**
Type: **loading platform**
produced since 2000

Technical data:
D-value: **17,7 kN**
maximum trailer weight: **3500 kg**
maximum vertical cup load: **120 kg**

Approval number according to Directive 94/20/EC: e20*94/20*0509*00

Foreword

This towbar is designed according to rules of safety traffic regulations. The towing hitch is a safety component and can be install only by qualified personnel. Any alteration or conversion of the towing hitch is prohibited and would lead to cancellation of design certification. Remove insulating compound and underseal from vehicle (if present) in the area of the matting surfaces of the towing hitch.
The vehicle manufacturer's specifications regarding trailer load and max. vertical cup load are decisive for driving whereat values for the towing hitch cannot be exceeded.
D-value formula:

$$\frac{\text{Max trailer weight [kg]} \times \text{Max vehicle weight [kg]}}{\text{Max trailer weight [kg]} + \text{Max vehicle weight [kg]}} \times \frac{9{,}81}{1000} = D\ [\text{kN}]$$

FITTING INSTRUCTION

Clamp mark in acc. with		Cables joining
ISO	PN	
1	L	Left directional lights
2	+	Rear fog lights
3	31	Ground
4	R	Right directional lights
5	58R	Right side parking lights
6	54	Stoplights
7	58L	Left side parking lights

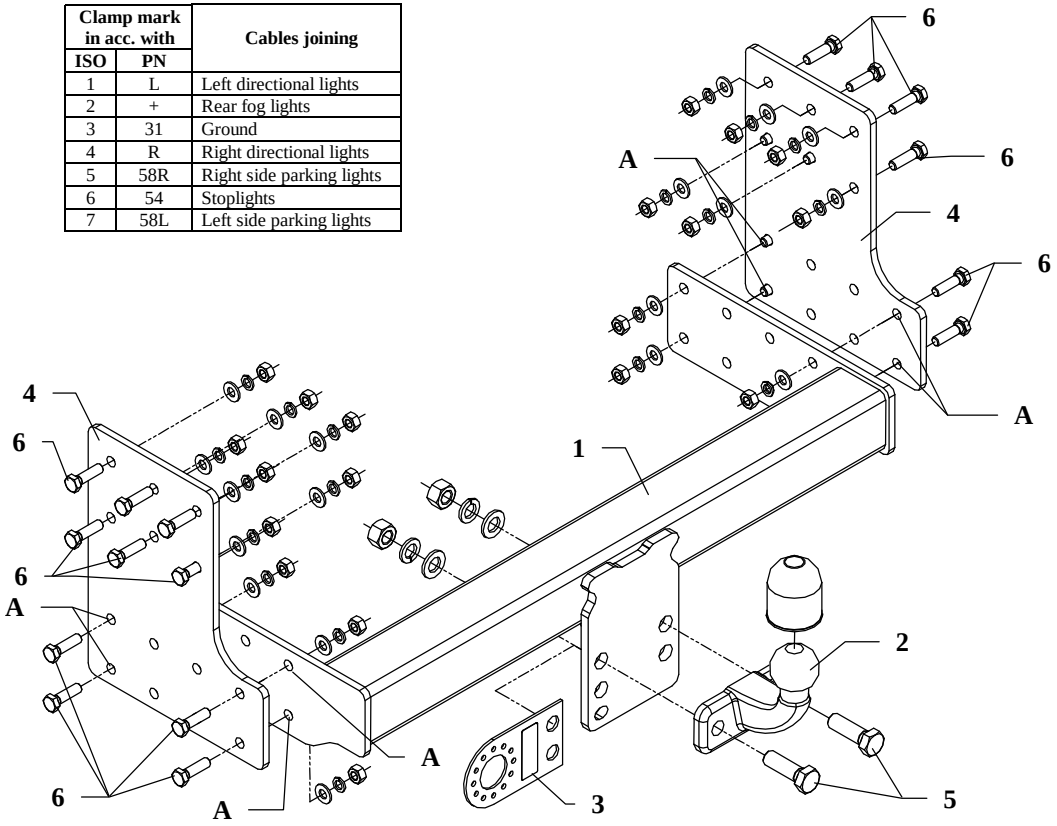

This towbar is designed to assembly in following cars: **NISSAN CABSTAR E, loading platform,** produced since 2000, catalogue no. **V22** and is prepared to tow trailers max total weight up to **3500 kg** and max vertical load **120 kg**.

From manufacturer

Thank you for buying our product. Their reliability has been confirmed in many tests. Reliability of towbar depends also on correct assembly and right operation. For this reasons we kindly ask to read carefully this instruction and apply to hints.

The towbar should be install in points described by a car producer.

The instruction of the assembly

1. For the purpose of installings of the towbar one ought to unscrew handles of the back panel, whereon are lamp, and then slip under it side-brackets of the towbar (pos. 4) and fix together to the frame using bolts M10x35mm (pos. 6) from the towbar accessories.
2. The main bar of the towbar (pos. 1) fix to installed previously brackets through holes (pos. A) using bolts M10x35mm (pos. 6).
3. Fix tow-ball (pos. 2) and socket plate (pos. 3) using bolts M16x50mm (pos. 5) from accessories.
4. Tighten all bolts according to the torque shown in the table.
5. Connect electric wires of 7-poles socket according to the instruction of the car. (Recommend to make at authorized service station).
6. Complete paint layer damaged during installation.

Torque settings for nuts and bolts (8,8):		
M6 - 11 Nm	**M8 -** 25 Nm	**M10 -** 50 Nm
M12 - 87 Nm	**M14 -** 138 Nm	**M16 -** 210 Nm

NOTE

After install the towbar you should get adequate note in registration book (at authorised service station). The car should be equipped with:

- Indicators
- Tow mirrors

After 1000km of exploitation check all bolts and nuts. The ball of towbar must be always kept clear and conserve with a grease.