FITTING INSTRUCTION

Clamp mark in acc. with		Cables joining
ISO	PN	
1	L	Left directional lights
2	+	Rear fog lights
3	31	Ground
4	R	Right directional lights
5	58R	Right side parking lights
6	54	Stoplights
7	58L	Left side parking lights

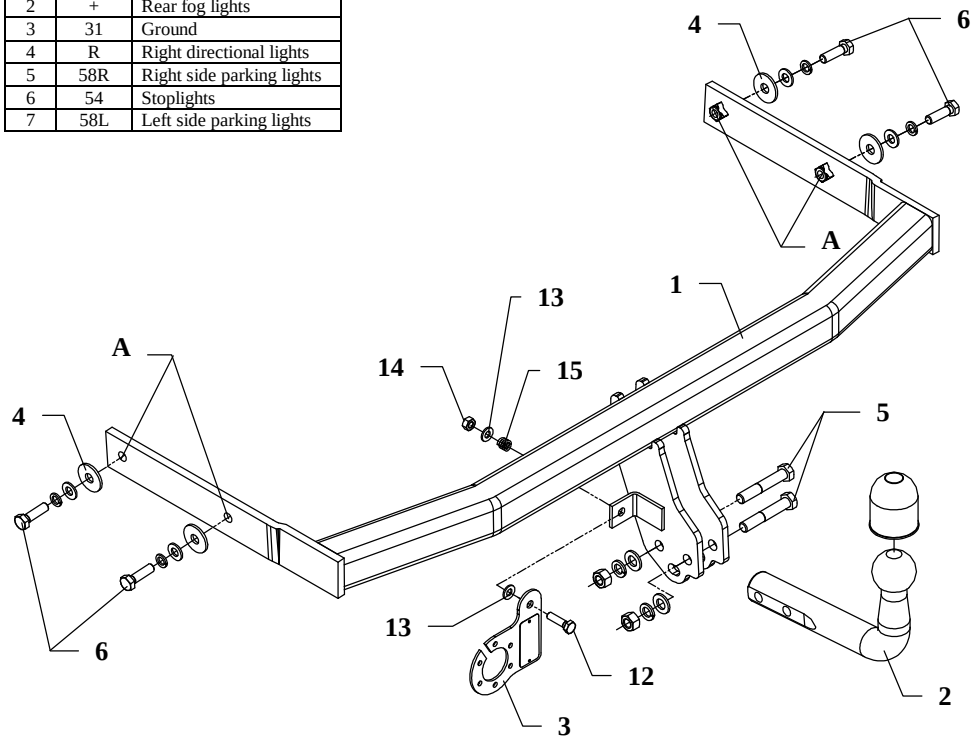

This towing hitch is designed to assembly in following car: **SEAT CORDOBA,** produced since 01.2003, catalogue no. **SC41** and is prepared to tow trailers max total weight **1200kg** and max vertical load **50kg.**

From manufacturer

Thank you for buying our product. Their reliability has been confirmed in many tests. Reliability of towing hitch depends also on correct assembly and right operation. For this reasons we kindly ask to read carefully this instruction and apply to hints.

The towing hitch should be install in points described by a car producer.

The instruction of the assembly

1. Disassemble the rear bumper and original metal bumper support (this part is not used any more).
2. Slide the main bar of the towing hitch (pos. 1) to the chassis members (do it such a way holes (pos. A) cover original holes in the chassis members), then fix it using bolts M10x35mm (pos. 6) together with plain washers (pos. 4).
3. Cut the bumper according to the fig. 2 and then reassemble it.

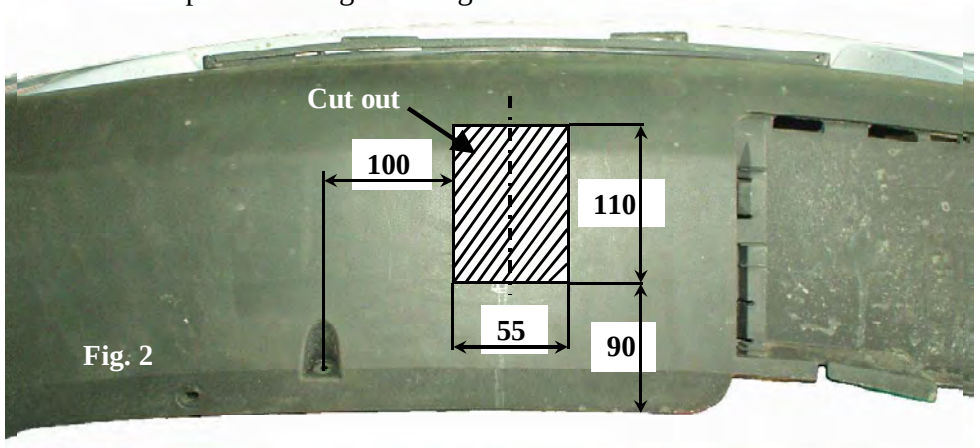

Fig. 2

4. Tighten all nuts and bolts according to the torque shown in the table.
5. Position the ball of towing hitch (pos. 2) and fix with M12x70mm (pos. 5) bolts from the towing hitch accessories.
6. Fix the socket plate (pos. 3) as shown on the drawing.
7. Connect the electric wires according to the instructions of the car
8. Complete the paint cover of towing hitch (during the mounting paint cover could be destroyed)

Torque settings for nuts and bolts (8,8):	
M 8 - 25 Nm	**M 10 -** 55 Nm
M 12 - 85 Nm	**M 14 -** 135 Nm

NOTE

After install the towing hitch you should get adequate note in registration book (at authorised service station).The car should be equipped with:

- Indicators
- Tow mirrors

After 1000km check all bolts and nuts. The ball of towing hitch must be always kept clear and conserve with a grease.

Towing hitch accessories:

Pos. 1 — Name: Main bar — Quantity: 1 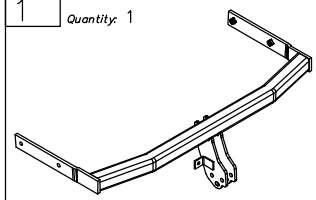	Pos. 5 — Name: Bolt 8,8 B — Quantity: 2 — Dim. : M12x70mm 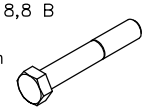	Pos. 11 — Name: Spring washer — Quantity: 4 — Dim. : Ø 10,2 mm 
	Pos. 6 — Name: Bolt 8,8 B — Quantity: 4 — Dim. : M10x35mm 	Pos. 12 — Name: Bolt 8,8 B — Quantity: 1 — Dim. : M8x30mm 
Pos. 2 — Name: Tow ball — Quantity: 1 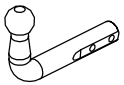	Pos. 7 — Name: Nut 8 B — Quantity: 2 — Dim. : M12 	Pos. 13 — Name: Plain washer — Quantity: 2 — Dim. : Ø 8,5 mm 
Pos. 3 — Name: Socket plate — Quantity: 1 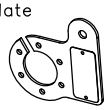	Pos. 8 — Name: Plain washer — Quantity: 2 — Dim. : Ø 13 mm 	Pos. 14 — Name: Nut 8 B — Quantity: 1 — Dim. : M8 
Pos. 4 — Name: Washer — Quantity: 4 — Dim. : Ø35xØ12x3mm 	Pos. 9 — Name: Plain washer — Quantity: 4 — Dim. : Ø 10,5 mm 	Pos. 15 — Name: Spring — Quantity: 1 
	Pos. 10 — Name: Spring washer — Quantity: 2 — Dim. : Ø 12,2 mm 	Pos. 16 — Name: Ball cover — Quantity: 1 

PPUH AUTO-HAK S.J.

Produkcja Haków Holowniczych
Henryk & Zbigniew Nejman
76-200 SŁUPSK ul. Słoneczna 16K
tel/fax (059) 8-414-414; 8-414-413
E-mail: office@autohak.com.pl
www. autohak.com.pl

Towing hitch (without electrical set)

Class: **A50-X** Cat. no. **SC41**
Designed for:
Manufacturer: **SEAT**
Model: **CORDOBA**
produced since 01.2003

Technical data:
D-value: **6,96 kN**
maximum trailer weight: **1200 kg**
maximum vertical cup load: **50 kg**

Approval number acc. to regulations EKG/ONZ 55.01: E20-55R-01 0799

Foreword

This towing hitch is designed according to rules of safety traffic regulations. The towing hitch is a safety component and can be install only by qualified personnel. Any alteration or conversion of the towing hitch is prohibited and would lead to cancellation of design certification. Remove insulating compound and underseal from vehicle (if present) in the area of the matting surfaces of the towing hitch.
The vehicle manufacturer's specifications regarding trailer load and max. vertical cup load are decisive for driving, and values for the towing hitch cannot be exceeded.
D-value formula:

$$\frac{\text{Max trailer weight [kg]} \times \text{Max vehicle weight [kg]}}{\text{Max trailer weight [kg]} + \text{Max vehicle weight [kg]}} \times \frac{9{,}81}{1000} = D\ [\text{kN}]$$