FITTING INSTRUCTION

Clamp mark in acc. with		Cables joining
ISO	PN	
1	L	Left directional lights
2	+	Rear fog lights
3	31	Ground
4	R	Right directional lights
5	58R	Right side parking lights
6	54	Stoplights
7	58L	Left side parking lights

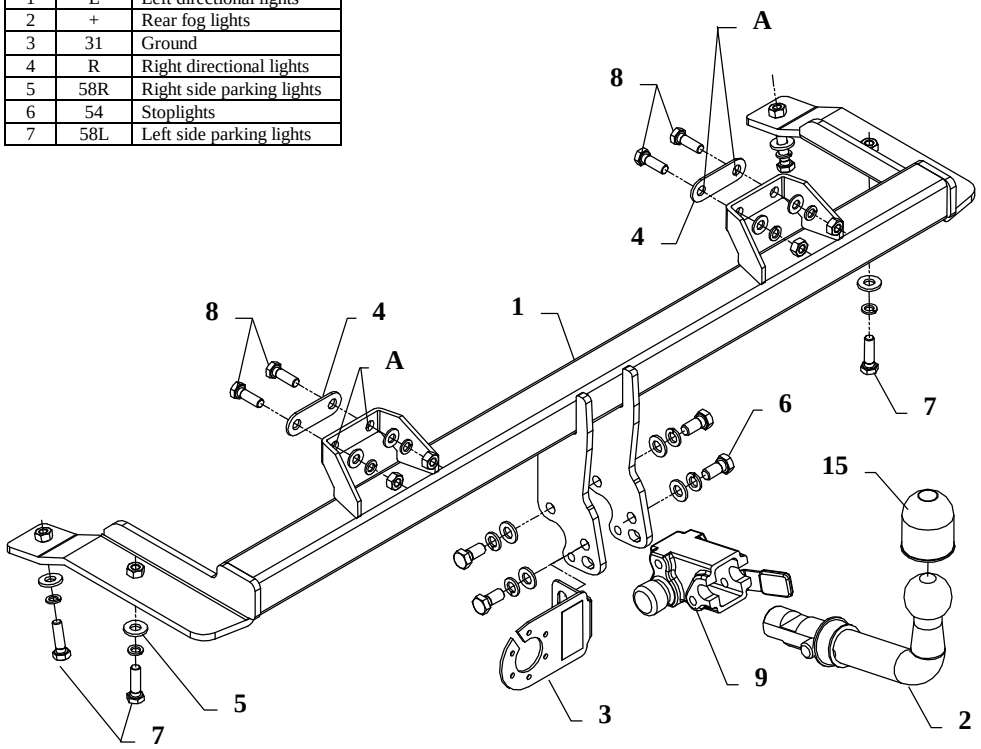

This towbar is designed to assembly in following cars:
SEAT TOLEDO I, 5 door, produced since 11.1995 till 04.1998, catalogue no. **SC27A** and is prepared to tow trailers max total weight **1450kg** and max vertical load **80kg**.

From manufacturer

Thank you for buying our product. Their reliability has been confirmed in many tests. Reliability of towbar depends also on correct assembly and right operation. For this reasons we kindly ask to read carefully this instruction and apply to hints.

The towbar should be install in points described by a car producer.

Fitting instructions

1. Disassemble the bumper and next unscrew handles (not used any more).
2. In lower part of bumper cut his fragment 95x80mm (use template).
3. Slip the main bar of towbar (pos. 1) to chassis members and next through original holes (from below the car) skrew using bolts M10x35mm (pos. 7) from towbar accessories (use round washers ø25x12x3mm – pos. 5) .
4. Through holes (pos. A) drill holes using bit ø10,5mm and next skrew using bolts M10x30mm (pos. 8) – use washers (pos. 4).
5. Assemble the bumper .
6. Fix body of the automat (pos. 9) and the socket plate (pos. 3) using bolts M12x25mm (pos. 6) from accessories. Place tow-ball (pos. 2) according to supplied instruction.
7. Tighten all bolts according to the torque shown in the table.
8. Connect electric wires of 7-poles socket according to the instruction of the car. (Recommend to make at authorized service station).
9. Complete the paint coating damaged during installation.

Torque settings for nuts and bolts (8,8):		
M6 - **11 Nm**	M 8 - **25 Nm**	M 10 - **50 Nm**
M 12 - **87 Nm**	M 14 - **138 Nm**	M16 - **210 Nm**

NOTE

After install the towbar you should get adequate note in registration book (at authorised service station).The car should be equipped with:

- Indicators
- Tow mirrors

After 1000km of exploitation check all bolts and nuts. The ball of towbar must be always kept clear and conserve with a grease.

Towbar accessories:

Pos. 1 Name: Main bar Quantity: 1 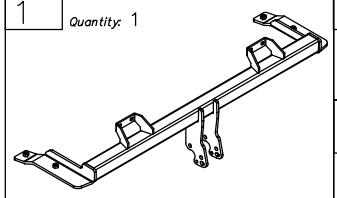	Pos. 5 Name: Round washer Quantity: 4 Dim. : ø25xø12x3mm 	Pos. 11 Name: Plain washer Quantity: 4 Dim. : ø 13 mm 
	Pos. 6 Name: Bolt 8,8 B Quantity: 4 Dim. : M12x25mm 	Pos. 12 Name: Plain washer Quantity: 4 Dim. : ø 10,5 mm 
Pos. 2 Name: Tow ball Quantity: 1 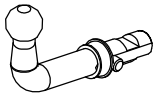	Pos. 7 Name: Bolt 8,8 B Quantity: 4 Dim. : M10x35mm 	Pos. 13 Name: Spring washer Quantity: 4 Dim. : ø 12,2 mm 
Pos. 3 Name: Socket plate Quantity: 1 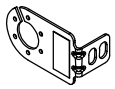	Pos. 8 Name: Bolt 8,8 B Quantity: 4 Dim. : M10x30mm 	Pos. 14 Name: Spring washer Quantity: 8 Dim. : ø 10,2 mm 
Pos. 4 Name: Washer Quantity: 2 Dim. : 78x26mm 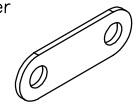	Pos. 9 Name: Body of the automat Quantity: 1 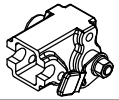	Pos. 15 Name: Ball cover Quantity: 1 
	Pos. 10 Name: Nut 8 B Quantity: 4 Dim. : M10 	Pos. 16 Name: Body plug Quantity: 1 

PPUH AUTO-HAK Sp.J.

Produkcja Zaczepów Kulowych
Henryk & Zbigniew Nejman
76-200 SŁUPSK ul. Słoneczna 16K
tel/fax (059) 8-414-414; 8-414-413
email: office@autohak.com.pl
www. autohak.com.pl

Towing hitch (without electrical set)

Class: **A50-X** Cat. no. **SC27A**
Designed for:
MANUFACTURER: **SEAT**
MODEL: **TOLEDO I**
Type: **5 doors**
produced since 11.1995 till 04.1998

Technical data:
maximum **D**-value: **7,45 kN**
maximum trailer weight: **1450 kg**
maximum vertical cup load: **80 kg**

Approval number according to Directive 94/20/EC: e20*94/20*1132*00

Foreword

This towbar is designed according to rules of safety traffic regulations. The towing hitch is a safety component and can be install only by qualified personnel. Any alteration or conversion of the towing hitch is prohibited and would lead to cancellation of design certification. Remove insulating compound and underseal from vehicle (if present) in the area of the matting surfaces of the towing hitch.
The vehicle manufacturer's specifications regarding trailer load and max. vertical cup load are decisive for driving, and values for the towing hitch cannot be exceeded.
D-value formula:

$$\frac{\text{Max trailer weight [kg]} \times \text{Max vehicle weight [kg]}}{\text{Max trailer weight [kg]} + \text{Max vehicle weight [kg]}} \times \frac{9{,}81}{1000} = D\ [\text{kN}]$$