FITTING INSTRUCTION

Clamp mark in acc. with		Cables joining
ISO	PN	
1	L	Left directional lights
2	+	Rear fog lights
3	31	Ground
4	R	Right directional lights
5	58R	Right side parking lights
6	54	Stoplights
7	58L	Left side parking lights

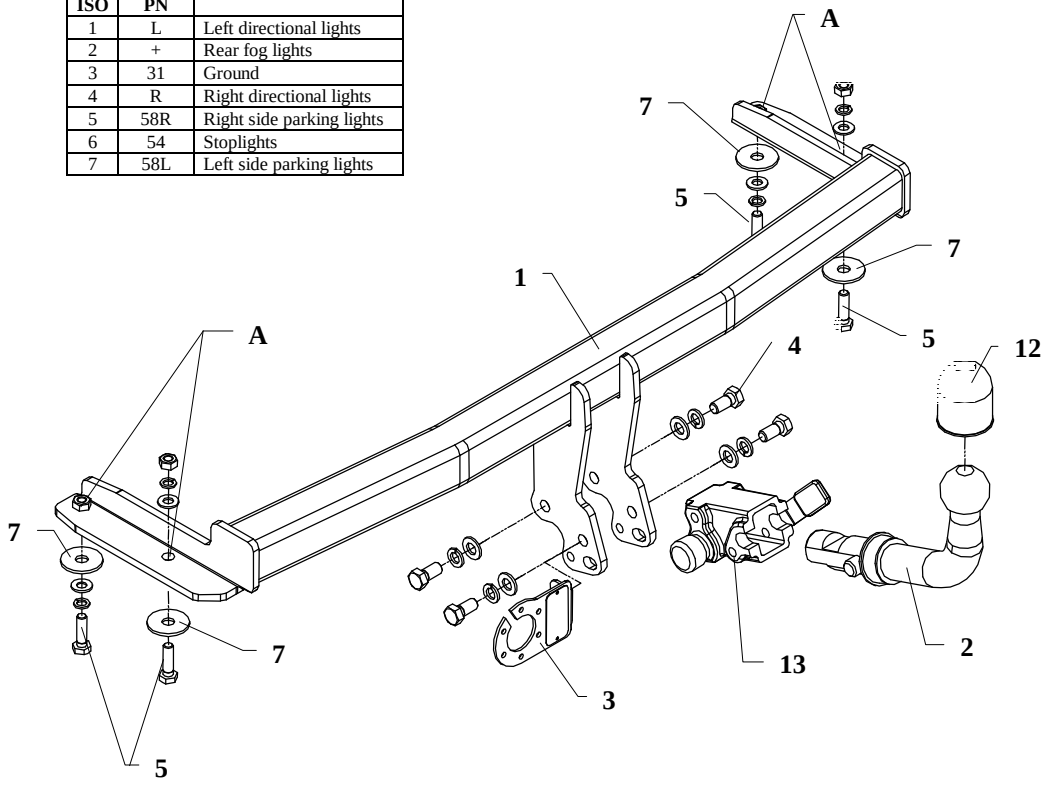

This towbar is designed to assembly in following cars:
SEAT IBIZA 4-5 doors GLX/GTI produced since 02.1996 till 08.1999, catalogue no. **SC07A** and is prepared to tow trailers max total weight **1100 kg** and max vertical load **50 kg**.

From manufacturer

Thank you for buying our product. Their reliability has been confirmed in many tests. Reliability of towbar depends also on correct assembly and correct exploitation. For this reasons we kindly ask to read carefully this instruction and apply to hints.

The towbar should be install in points described by a car producer.

Assemble instruction

1. Remove the bumper and his metal reinforcement (reinforcement not used any more).
2. To chassis members put main bar of tow-bar (pos. 1) in that way so holes (pos. A) agree with existing holes in chassis members.
3. Reassemble the bumper after cut out its fragment 75x85mm.
4. Fix body of the automat (pos. 13) and the socket plate (pos. 3) using bolts M12x25mm (pos. 4) from accessories. Place tow-ball (pos. 2) according to supplied instruction.
5. Tighten all bolts according to the torque shown in the table.
6. Connect electric wires of 7-poles socket according to the instruction of the car. (Recommend to make at authorized service station)
7. Complete paint layer damaged during installation.

Torque settings for nuts and bolts (8,8):

M 8	25 Nm	**M 10**	55 Nm
M 12	85 Nm	**M 14**	135 Nm

NOTE

After install the towbar you should get adequate note in registration book (at authorised service station).The car should be equipped with:

- Indicators
- Tow mirrors

After 1000km check all bolts and nuts. The ball of towbar must be always kept clear and conserve with a grease.

Towbar accessories:

Pos. 1 Name: Main bar Quantity: 1 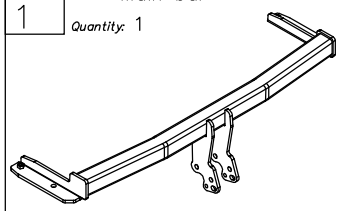	Pos. 5 Name: Bolt 8,8 B Quantity: 4 Dim. : M10x35mm 	Pos. 10 Name: Spring washer Quantity: 4 Dim. : Ø 12,2 mm 
	Pos. 6 Name: Nut 8 B Quantity: 2 Dim. : M10 	Pos. 11 Name: Spring washer Quantity: 4 Dim. : Ø 10,2 mm 
Pos. 2 Name: Tow ball Quantity: 1 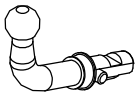	Pos. 7 Name: Plain washer Quantity: 4 Dim. : Ø42xØ13x3mm 	Pos. 12 Name: Ball cover Quantity: 1 
Pos. 3 Name: Socket plate Quantity: 1 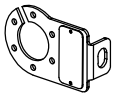	Pos. 8 Name: Podkładka zwykła Quantity: 4 Dim. : Ø 13 mm 	Pos. 13 Name: Body of automat Quantity: 1 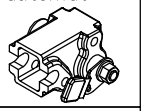
Pos. 4 Name: Bolt 8,8 B Quantity: 4 Dim. : M12x25mm 	Pos. 9 Name: Plain washer Quantity: 4 Dim. : Ø 10,5 mm 	Pos. 14 Name: Plug body Quantity: 1 

PPUH AUTO-HAK S.J.

Produkcja Haków Holowniczych
Henryk & Zbigniew Nejman
76-200 SŁUPSK ul. Słoneczna 16K
tel/fax (059) 8-414-414; 8-414-413
E-mail: office@autohak.com.pl
www. autohak.com.pl

Towing hitch (without electrical set)

Class: **A50-X** Cat. no. **SC07A**
Designed for:
Manufacturer: **SEAT**
Model: **IBIZA GLX/GTI**
Type: **4 – 5 doors**
produced since 02.1996 till 08.1999

Technical data:
D-value: **6,31 kN**
maximum trailer weight: **1100 kg**
maximum vertical cup load: **50 kg**

Approval number acc. to regulations EKG/ONZ 55.01: E20 55R-01 1627

Foreword

This towbar is design according to rules of safety traffic regulations. The towing hitch is a safety component and must be installed only by qualified personnel. Any alteration or conversion to the towing hitch is prohibited and would lead to cancellation of design certification. Remove insulating compound and underseal from vehicle (if present) in the area of the matting surfaces of the towing hitch.
The vehicle manufacturer's specifications regarding trailer load and max. vertical cup load are decisive for driving, and values for the towing hitch must not be exceeded.
D-value formula:

$$\frac{\text{Max trailer weight [kg]} \times \text{Max vehicle weight [kg]}}{\text{Max trailer weight [kg]} + \text{Max vehicle weight [kg]}} \times \frac{9{,}81}{1000} = D\ [\text{kN}]$$