Towing hitch accessories:

| | | |
|---|---|---|
| Pos. 1 Main bar<br>PCS.: 1<br>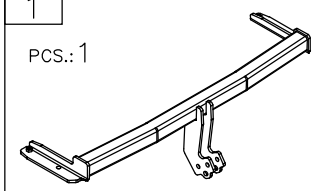 | Pos. 5 Bolt 8,8 B M12x70mm<br>PCS.: 1<br>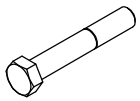 | Pos. 10 Spring washer ø12,2mm<br>PCS.: 2<br> |
| | Pos. 6 Bolt 8,8 B M10x35mm<br>PCS.: 4<br> | Pos. 11 Spring washer ø10,2mm<br>PCS.: 4<br> |
| Pos. 2 Tow ball<br>PCS.: 1<br>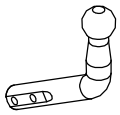 | Pos. 7 Plain washer ø30xø10,5x2,5mm<br>PCS.: 4<br> | Pos. 12 Nut 8 B M12<br>PCS.: 2<br> |
| Pos. 3 Socket plate<br>PCS.: 1<br>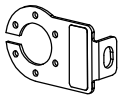 | Pos. 8 Plain washer ø13mm<br>PCS.: 2<br> | Pos. 13 Nut 8 B M10<br>PCS.: 2<br> |
| Pos. 4 Bolt 8,8 B M12x75mm<br>PCS.: 1<br>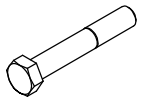 | Pos. 9 Plain washer ø10,5mm<br>PCS.: 2<br> | Pos. 14 Ball cover<br>PCS.: 1<br> |


**PPUH AUTO-HAK Sp.J.**

Produkcja Zaczepów Kulowych
Henryk & Zbigniew Nejman
76-200 SŁUPSK ul. Słoneczna 16K
tel/fax (059) 8-414-414; 8-414-413
E-mail: office@autohak.com.pl
www. autohak.com.pl


# Towing hitch (without electrical set)

Class: **A50-X** Cat. no. **SC03**
Designed for:
Manufacturer: **SEAT**
Model: **IBIZA**
Type: **3/5 doors**
produced since 09.1999 till 04.2002

Technical data:
**D**-value: **6,39 kN**
maximum trailer weight: **1200 kg**
maximum vertical cup load: **50 kg**

**Approval number acc. to regulations EKG/ONZ 55.01: E20-55R-01 1108**

## *Foreword*

This towing hitch is designed according to rules of safety traffic regulations. The towing hitch is a safety component and can be install only by qualified personnel. Any alteration or conversion of the towing hitch is prohibited and would lead to cancellation of design certification. Remove insulating compound and underseal from vehicle (if present) in the area of the matting surfaces of the towing hitch.
The vehicle manufacturer's specifications regarding trailer load and max. vertical cup load are decisive for driving, and values for the towing hitch cannot be exceeded.
*D-value formula:*

$$\frac{\text{Max trailer weight [kg]} \times \text{Max vehicle weight [kg]}}{\text{Max trailer weight [kg]} + \text{Max vehicle weight [kg]}} \times \frac{9{,}81}{1000} = D\ [\text{kN}]$$

## FITTING INSTRUCTION

| Clamp mark in acc. with | | Cables joining |
|---|---|---|
| ISO | PN | |
| 1 | L | Left directional lights |
| 2 | + | Rear fog lights |
| 3 | 31 | Ground |
| 4 | R | Right directional lights |
| 5 | 58R | Right side parking lights |
| 6 | 54 | Stoplights |
| 7 | 58L | Left side parking lights |

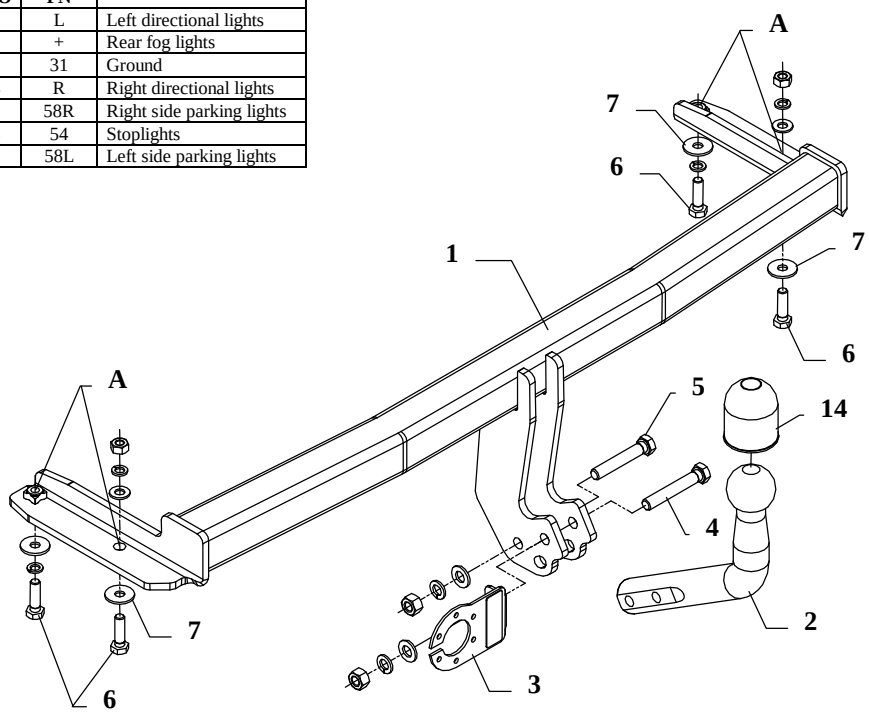


This towing hitch is designed to assembly in following cars: **SEAT IBIZA, 3/5 doors,** produced since 09.1999 till 04.2002, catalogue no. **SC03** and is prepared to tow trailers max total weight **1200 kg** and max vertical load **50 kg.**

### *From manufacturer*

Thank you for buying our product. Their reliability has been confirmed in many tests. Reliability of towing hitch depends also on correct assembly and right operation. For this reasons we kindly ask to read carefully this instruction and apply to hints.

*The towing hitch should be install in points described by a car producer.*

## The instructions of the assembly

1. Disassemble bumper and metal reinforcements (not used any more).
2. Put main bar of the towing hitch (pos. 1) into chassis members (holes pos. A properly to existing holes in chassis members). Twist using bolts M10x35mm (pos. 6).
3. Cut out fragment of bumper (in axis, 50x100mm) and install it.
4. Fix tow-ball (pos. 2) and socket plate (pos. 3) by bolts M12x75mm (pos. 4) and M12x70mm (pos. 5) from accessories.
5. Tight all bolts according to the torque shown in the table.
6. Connect the electric wires according to the instruction of the car. (Recommend to make at service station)
7. Supplement the paint coating damaged during assembly.

| Torque settings for nuts and bolts (8,8): | | |
|---|---|---|
| **M6** - 11 Nm | **M8** - 25 Nm | **M10** - 50 Nm |
| **M12** - 87 Nm | **M14** - 138 Nm | **M16** - 210 Nm |

## NOTE

After install the towing hitch you should get adequate note in registration book (at authorised service station).The car should be equipped with:

- Indicators
- Tow mirrors

After 1000km of exploitation check all bolts and nuts. The ball of towing hitch must be always kept clear and conserve with a grease.