FITTING INSTRUCTION

Clamp mark in acc. with		Cables joining
ISO	PN	
1	L	Left directional lights
2	+	Rear fog lights
3	31	Ground
4	R	Right directional lights
5	58R	Right side parking lights
6	54	Stoplights
7	58L	Left side parking lights

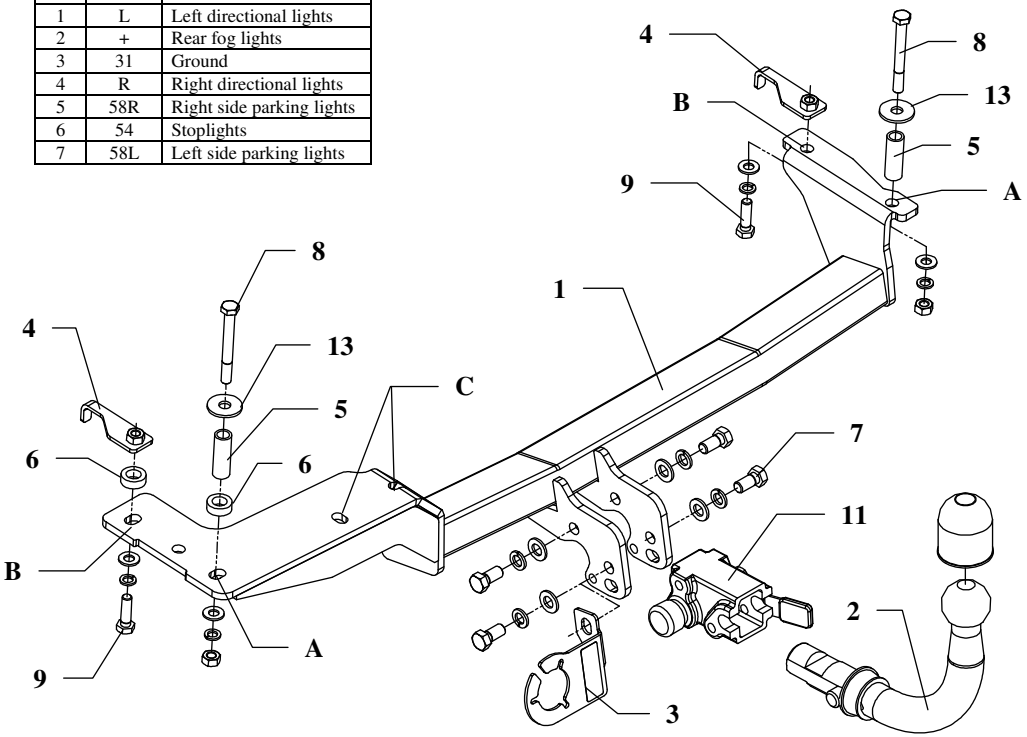

This towing hitch is designed to assembly in following cars:
SEAT IBIZA 3/5 doors, produced since 04.1993 till 01.1996, catalogue number **SC01A** and is prepared to tow trailers max total weight **1100 kg** and max vertical load **75 kg**.

From manufacturer

Thank you for buying our product. Their reliability has been confirmed in many tests. Reliability of towing hitch depends also on correct assembly and right operation. For this reasons we kindly ask to read carefully this instruction and apply to hints.

The towing hitch should be install in points described by a car producer.

The instruction of the assembly

1. Get lower the muffler from rubber handles.
2. Underneath the car, through holes in chassis member drill holes inside the trunk using bit ø12 mm. Next enlarge made holes using bit ø17mm in wall only from inside of the trunk.
3. To enlarged holes put distance sleeves L=50mm (pos. 5)
4. Underneath the car apply main bar of the towing hitch (pos. 1) to chassis members and fix using bolts M10x90mm (pos. 8) through distance sleeves (pos. 5) and holes pos. A.
5. By big holes in chassis members put nuts on the jib (pos. 4) and fix it through holes pos. B using bolts M10x35mm (pos. 9)
   NOTE: On the left side put small distance sleeves ø25xø13x9mm (pos. 6) before fixing.
6. Through holes pos. C reassemble the muffler using bolts M8x35mm (pos. 10) from equipment.
7. Fix body of the automat (pos. 11) and the socket plate (pos. 3) using bolts M12x25mm (pos. 7) from accessories. Place tow-ball (pos. 2) according to supplied instruction.
8. Fix tight all bolts according to the torque shown in the table.
9. Connect electric wires of 7-poles socket according to the instruction of the car. (Recommend to make at authorized service station)
10. Complete paint layer damaged during installation.

Torque settings for nuts and bolts (8,8):	
M 8 - 25 Nm	**M 10 -** 55 Nm
M 12 - 85 Nm	**M 14 -** 135 Nm

NOTE

After install the towing hitch you should get adequate note in registration book (at authorised service station).The car should be equipped with:

- Indicators
- Tow mirrors

After 1000km check all bolts and nuts. The ball of towing hitch must be always kept clear and conserve with a grease.

Towing hitch equipment:

Pos. 1 — Name: Main bar — Quantity: 1 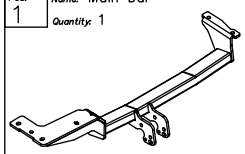	Pos. 6 — Name: Distance sleeve II — Quantity: 2 — Dim.: ø25x5mm L=9mm 	Pos. 12 — Name: Nut 8 B — Quantity: 2 — Dim.: M10 	Pos. 18 — Name: Spring washer — Quantity: 4 — Dim.: ø 10,2 mm 
	Pos. 7 — Name: Bolt 8,8 B — Quantity: 4 — Dim.: M12x25mm 	Pos. 13 — Name: Washer — Quantity: 2 — Dim.: ø37xø13x3mm 	Pos. 19 — Name: Spring washer — Quantity: 2 — Dim.: ø 8,2 mm 
Pos. 2 — Name: Tow ball — Quantity: 1 	Pos. 8 — Name: Bolt 8,8 B — Quantity: 2 — Dim.: M10x90mm 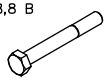	Pos. 14 — Name: Plain washer — Quantity: 4 — Dim.: ø 13 mm 	Pos. 20 — Name: Ball cover — Quantity: 1 
Pos. 3 — Name: Socket plate — Quantity: 1 	Pos. 9 — Name: Bolt 8,8 B — Quantity: 2 — Dim.: M10x35mm 	Pos. 15 — Name: Plain washer — Quantity: 4 — Dim.: ø 10,5 mm 	Pos. 21 — Name: Body plug — Quantity: 1 
Pos. 4 — Name: Nut on the jib — Quantity: 2 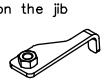	Pos. 10 — Name: Bolt 8,8 B — Quantity: 2 — Dim.: M8x35mm 	Pos. 16 — Name: Plain washer — Quantity: 2 — Dim.: ø 8,5 mm 	
Pos. 5 — Name: Distance sleeve I — Quantity: 2 — Dim.: ø17,2x2,35mm L=50mm 	Pos. 11 — Name: Body of the automat — Quantity: 1 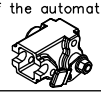	Pos. 17 — Name: Spring washer — Quantity: 4 — Dim.: ø 12,2 mm 	

PPUH AUTO-HAK S.J.

Produkcja Haków Holowniczych
Henryk & Zbigniew Nejman
76-200 SŁUPSK ul. Słoneczna 16K
tel/fax (059) 8-414-414; 8-414-413
E-mail: office@autohak.com.pl
www. autohak.com.pl

Towing hitch (without electrical set)

Class: **A50-X** Cat. no. **SC01A**
Designed for:
Manufacturer: **SEAT**
Model: **IBIZA**
Type: **3/5 drz.**
produced since 04.1993 till 01.1996

Technical data:
D-value: **6,6 kN**
maximum trailer weight: **1100 kg**
maximum vertical cup load: **75 kg**

Approval number according to Directive 94/20/EC: e20*94/20*0326*00

Foreword

This towing hitch is designed according to rules of safety traffic regulations. The towing hitch is a safety component and can be install only by qualified personnel. Any alteration or conversion of the towing hitch is prohibited and would lead to cancellation of design certification. Remove insulating compound and underseal from vehicle (if present) in the area of the matting surfaces of the towing hitch.
The vehicle manufacturer's specifications regarding trailer load and max. vertical cup load are decisive for driving whereat values for the towing hitch cannot be exceeded.
D-value formula:

$$\frac{\text{Max trailer weight [kg]} \times \text{Max vehicle weight [kg]}}{\text{Max trailer weight [kg]} + \text{Max vehicle weight [kg]}} \times \frac{9{,}81}{1000} = D\ [\text{kN}]$$