# FITTING INSTRUCTION

| Clamp mark in acc. with | | Cables joining |
|---|---|---|
| ISO | PN | |
| 1 | L | Left directional lights |
| 2 | + | Rear fog lights |
| 3 | 31 | Ground |
| 4 | R | Right directional lights |
| 5 | 58R | Right side parking lights |
| 6 | 54 | Stoplights |
| 7 | 58L | Left side parking lights |

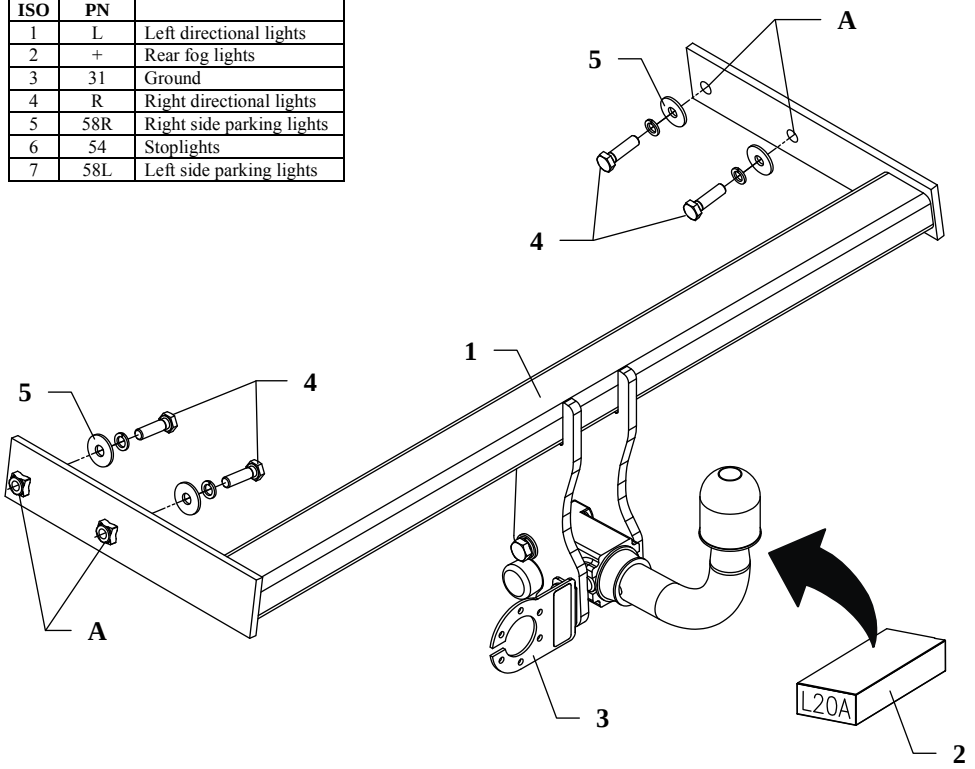


This towing hitch is designed to assembly in following cars: **VOLVO S80 (4 doors)** produced since 08.2006 and **V70 (estate),** produced since 08.2007, catalogue no. **L20A** and is prepared to tow trailers max total weight **2100 kg** and max vertical cup load **90 kg**.

### *From manufacturer*

Thank you for buying our product. Their reliability has been confirmed in many tests. Reliability of towing hitch depends also on correct assembly and right operation. For this reasons we kindly ask to read carefully this instruction and apply to hints.

*The towing hitch should be install in points described by a car producer.*

## The instruction of the assembly

1. For the purpose of installings of the towing hitch one ought to disassemble the bumper with its metal reinforcement and take off the plastic part of the rear panel.
2. On the left side of chassis get lower the muffler – unfasten from last handle.
3. Remove the heat shield.
4. Apply the main bar of the towing hitch (pos. 1) to the frame of the car and fix through holes A using bolts M10x35mm (pos. 4). Use large washers (pos. 5) from the towing hitch accessories.
5. Cut out underneath the bumper the fragment in its axis (width 80mm and depth 110mm).
6. Install all removed elements mentioned in preceding points.
7. Fix body of the automat and place tow-ball according to supplied instruction. Note! Remember to place socket plate (pos. 3) as shown on the drawing.
8. Tighten all bolts according to the torque shown in the table.
9. Connect electric wires of 7-poles socket according to the instruction of the car. (Recommend to make at authorized service station).
10. Complete paint layer damaged during installation.

| Torque settings for nuts and bolts (8,8): | | |
|---|---|---|
| **M6** - 11 Nm | **M8** - 25 Nm | **M10** - 50 Nm |
| **M12** - 87 Nm | **M14** - 138 Nm | **M16** - 210 Nm |

## NOTE

After install the towing hitch you should get adequate note in registration book (at authorised service station). The car should be equipped with:

- Indicators
- Tow mirrors

After 1000km of exploitation check all bolts and nuts. The ball of towing hitch must be always kept clear and conserve with a grease.

Towing hitch accessories:

| | |
|---|---|
| Pos. 1 Main bar<br>PCS.: 1<br>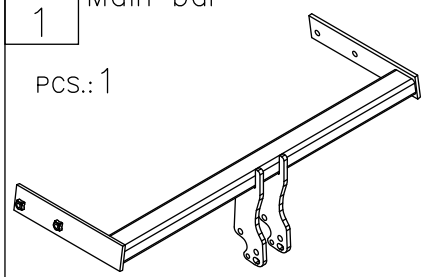 | Pos. 4 Bolt 8,8 B M10x35mm<br>PCS.: 4<br>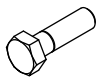 |
| | Pos. 5 Washer ø30xø10.5x2.5mm<br>PCS.: 4<br> |
| Pos. 2 Tow ball<br>PCS.: 1<br>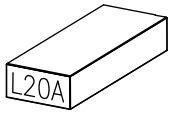 | Pos. 6 Spring washer ø10mm<br>PCS.: 4<br> |
| Pos. 3 Socket plate<br>PCS.: 1<br>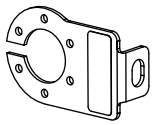 | |


**PPUH AUTO-HAK S.J.**

Produkcja Zaczepów Kulowych
Henryk & Zbigniew Nejman
76-200 SŁUPSK ul. Słoneczna 16K
tel/fax (059) 8-414-414; 8-414-413
E-mail: office@autohak.com.pl
www.autohak.com.pl


# Towing hitch (without electrical set)

Class: **A50-X** Cat. no. **L20A**
Designed for:
Manufacturer: **VOLVO**
**Model:**
**S80** (4 doors) produced since 08.2006
**V70** (estate) produced since 08.2007

Technical data:
**D**-value: **11,0 kN**
maximum trailer weight: **2100 kg**
maximum vertical cup mass: **90 kg**

**Approval number according to Directive 94/20/EC: e20*94/20*0422*00**

## *Foreword*

This towing hitch is designed according to rules of safety traffic regulations. The towing hitch is a safety component and can be install only by qualified personnel. Any alteration or conversion of the towing hitch is prohibited and would lead to cancellation of design certification. Remove insulating compound and underseal from vehicle (if present) in the area of the matting surfaces of the towing hitch.
The vehicle manufacturer's specifications regarding trailer mass and max. vertical cup mass are decisive for driving whereat values for the towing hitch cannot be exceeded.
*D-value formula:*

$$\frac{\text{Max trailer weight [kg]} \times \text{Max vehicle weight [kg]}}{\text{Max trailer weight [kg]} + \text{Max vehicle weight [kg]}} \times \frac{9{,}81}{1000} = D\ [\text{kN}]$$