FITTING INSTRUCTION

Clamp mark in acc. with		Cables joining
ISO	PN	
1	L	Left directional lights
2	+	Rear fog lights
3	31	Ground
4	R	Right directional lights
5	58R	Right side parking lights
6	54	Stoplights
7	58L	Left side parking lights

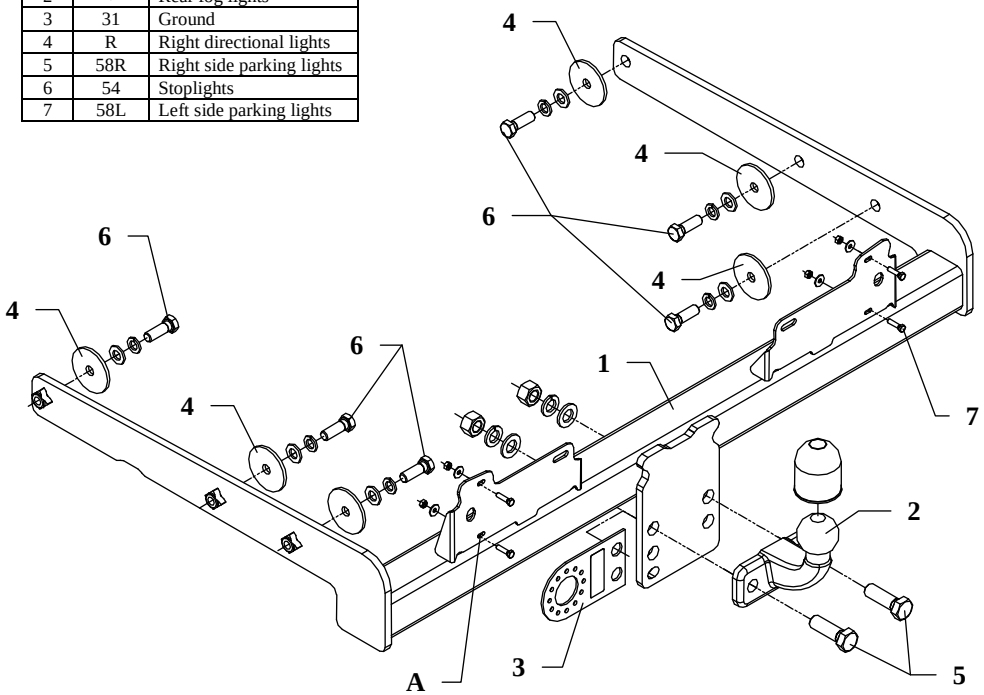

This towing hitch is designed to assembly in following cars: **VOLKSWAGEN T4 TRANSPORTER, loading platform,** produced since 09.1990 till 12.2002, catalogue no. **K28** and is prepared to tow trailers max total weight **2500 kg** and max vertical mass **100 kg**.

From manufacturer

Thank you for buying our product. Their reliability has been confirmed in many tests. Reliability of towing hitch depends also on correct assembly and right operation. For this reasons we kindly ask to read carefully this instruction and apply to hints.

The towing hitch should be install in points described by a car producer.

The instruction of the assembly

1. For the purpose of installings of the towing hitch one ought to unscrew the number plate and little lamps which light up it.
2. Slip the main bar of the towing hitch (pos. 1) into the frame of the car and fix it through the factory-made holes using bolts M12x35mm (pos. 6) from the towing hitch accessories (use washers ø58xø12.5x4mm - pos. 4).
3. Fix tow ball (pos. 2) using bolts M16x50mm (pos. 5). One from these bolts fix also the socket plate (pos. 3) in accordance with the drawing.
4. Fix the number plate along with little lamps through holes (pos. A) of the towing hitch.
5. Tighten all bolts according to the torque shown in the table.
6. Connect electric wires of 7-poles socket according to the instruction of the car. (Recommend to make at authorized service station).
7. Complete paint layer damaged during installation.

Torque settings for nuts and bolts (8,8):		
M6 - 11 Nm	**M8** - 25 Nm	**M10** - 50 Nm
M12 - 87 Nm	**M14** - 138 Nm	**M16** - 210 Nm

NOTE

After install the towing hitch you should get adequate note in registration book (at authorised service station). The car should be equipped with:

- Indicators
- Tow mirrors

After 1000km check all bolts and nuts. The ball of towing hitch must be always kept clear and conserve with a grease.

Towing hitch accessories:

Pos. 1 Main bar PCS.: 1 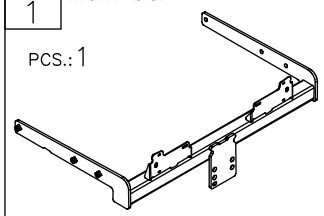	Pos. 5 Bolt 8,8 B M16x50mm PCS.: 2 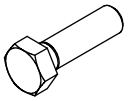	Pos. 10 Plain washer ø17mm PCS.: 2 
	Pos. 6 Bolt 8,8 B M12x35mm PCS.: 6 	Pos. 11 Plain washer ø13mm PCS.: 6 
Pos. 2 Tow ball PCS.: 1 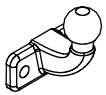	Pos. 7 Bolt 8,8 B M5x20mm PCS.: 4 	Pos. 12 Plain washer ø15xø5.3x1.2 PCS.: 4 
Pos. 3 Socket plate PCS.: 1 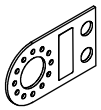	Pos. 8 Nut 8 B M16 PCS.: 2 	Pos. 13 Spring washer ø16.3mm PCS.: 2 
Pos. 4 Washer ø58xø12.5x4 PCS.: 6 	Pos. 9 Nut 8 B M5 PCS.: 4 	Pos. 14 Spring washer ø12.2mm PCS.: 6 
		Pos. 15 Ball cover PCS.: 1 

PPUH AUTO-HAK Sp.J.

Produkcja Zaczepów Kulowych
Henryk & Zbigniew Nejman
76-200 SŁUPSK ul. Słoneczna 16K
tel/fax (059) 8-414-414; 8-414-413
E-mail: office@autohak.com.pl
www.autohak.com.pl

Towing hitch (without electrical set)

Class: **A50-X** Cat. no. **K28**
Designed for:
Manufacturer: **VOLKSWAGEN**
Model: **T4 TRANSPORTER**
Type: **loading platform**
produced since 09.1990 till 12.2002

Technical data:
D-value: **12,9 kN**
maximum trailer weight: **2500 kg**
maximum vertical cup mass: **100 kg**

Approval number according to Directive 94/20/EC: e20*94/20*0393*00

Foreword

This towing hitch is designed according to rules of safety traffic regulations. The towing hitch is a safety component and can be install only by qualified personnel. Any alteration or conversion of the towing hitch is prohibited and would lead to cancellation of design certification. Remove insulating compound and underseal from vehicle (if present) in the area of the matting surfaces of the towing hitch.
The vehicle manufacturer's specifications regarding trailer mass and max. vertical cup mass are decisive for driving whereat values for the towing hitch cannot be exceeded.
D-value formula:

$$\frac{\text{Max trailer weight [kg]} \times \text{Max vehicle weight [kg]}}{\text{Max trailer weight [kg]} + \text{Max vehicle weight [kg]}} \times \frac{9{,}81}{1000} = D\ [\text{kN}]$$