Towing hitch accessories:

| | | |
|---|---|---|
| Pos. 1 Main bar<br>PCS.: 1<br>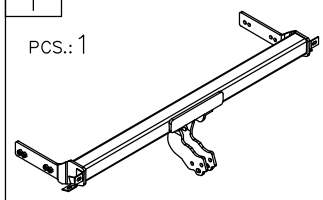 | Pos. 4 Fish–plate 160x48x4mm<br>PCS.: 2 | Pos. 9 Plain washer ø10,5mm<br>PCS.: 4 |
| | Pos. 5 Bolt 8,8 B M12x75mm<br>PCS.: 1 | Pos. 10 Spring washer ø12,2mm<br>PCS.: 2 |
| Pos. 2 Tow ball<br>PCS.: 1 | Pos. 6 Bolt 8,8 B M12x70mm<br>PCS.: 1 | Pos. 11 Spring washer ø10,2mm<br>PCS.: 4 |
| Pos. 3 Socket plate<br>PCS.: 1 | Pos. 7 Bolt 8,8 B M10x40mm<br>PCS.: 4 | Pos. 12 Nut 8 B M12<br>PCS.: 2 |
| | Pos. 8 Plain washer ø13mm<br>PCS.: 2 | Pos. 13 Ball cover<br>PCS.: 1 |


**PPUH AUTO-HAK Sp.J.**

Produkcja Zaczepów Kulowych
Henryk & Zbigniew Nejman
76-200 SŁUPSK ul. Słoneczna 16K
tel/fax (059) 8-414-414; 8-414-413
E-mail: office@autohak.com.pl
www. autohak.com.pl


# Towing hitch (without electrical set)

Class: **A50-X** Cat. no. **K19**
Designed for:
Manufacturer: **VOLKSWAGEN**
Model: **PASSAT**
Type: **CL, 4 doors, ESTATE**
produced since 10.1993 till 09.1996

Technical data:
**D**-value: **9,81 kN**
maximum trailer weight: **2000 kg**
maximum vertical cup load: **85 kg**

**Approval number according to Directive 94/20/EC: e20*94/20*0669*00**

## *Foreword*

This towing hitch is designed according to rules of safety traffic regulations. The towing hitch is a safety component and can be install only by qualified personnel. Any alteration or conversion of the towing hitch is prohibited and would lead to cancellation of design certification. Remove insulating compound and underseal from vehicle (if present) in the area of the matting surfaces of the towing hitch.
The vehicle manufacturer's specifications regarding trailer load and max. vertical cup load are decisive for driving whereat values for the towing hitch cannot be exceeded.
*D-value formula:*

$$\frac{\text{Max trailer weight [kg]} \times \text{Max vehicle weight [kg]}}{\text{Max trailer weight [kg]} + \text{Max vehicle weight [kg]}} \times \frac{9{,}81}{1000} = D\ [\text{kN}]$$

## FITTING INSTRUCTION

| Clamp mark in acc. with | | Cables joining |
|---|---|---|
| ISO | PN | |
| 1 | L | Left directional lights |
| 2 | + | Rear fog lights |
| 3 | 31 | Ground |
| 4 | R | Right directional lights |
| 5 | 58R | Right side parking lights |
| 6 | 54 | Stoplights |
| 7 | 58L | Left side parking lights |

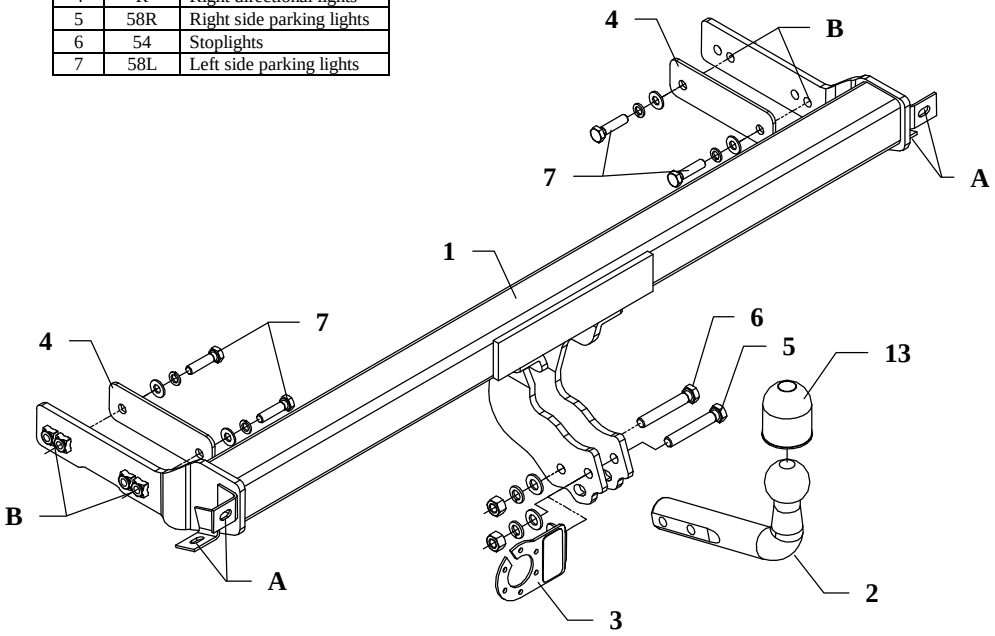


This towing hitch is designed to assembly in following car: **VOLKSWAGEN PASSAT CL, 4 doors, ESTATE,** produced since 10.1993 till 09.1996, catalogue no. **K19** and is prepared to tow trailers max total weight **2000 kg** and max vertical mass **85 kg.**

### *From manufacturer*

Thank you for buying our product. Their reliability has been confirmed in many tests. Reliability of towing hitch depends also on correct assembly and correct exploitation. For this reasons we kindly ask to read carefully this instruction and apply to hints.

*The towing hitch should be install in points described by a car producer.*

## The instruction of the assembly

1. To install our towing hitch You should disassemble the bumper. Next unscrew original fastening handles on the left and right side.
2. Cut out fragment of the bumper according with fig. 2. Inside part fragment 50x75mm.

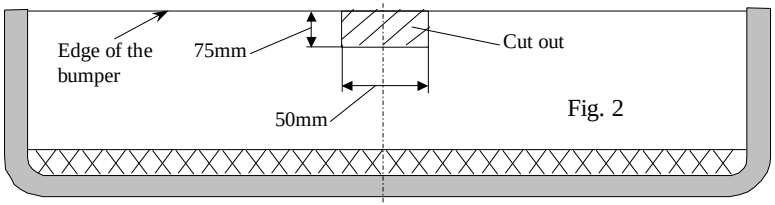

Fig. 2

3. Fix the bumper with main bar of the towing hitch (pos. 1) through holes (pos. A – in places after disassembled handles).
4. In this way prepared towing hitch with bumper fix to the car through fish-plates pos. 4 (fish-plates put in the trunk) and through suitable holes (pos. B). Use bolts M10x40mm (pos. 7) from accessories.
5. Fix tow-ball (pos. 2) and socket plate (pos. 3) using bolts M12x75mm (pos. 5) and M12x70mm (pos. 6) from accessories.
6. Tighten all bolts according to the torque shown in the table.
7. Connect electric wires of 7-pole socket according to the instruction of the car. (Recommend to make at authorized service station).
8. Complete paint layer damaged during installation.

| Torque settings for nuts and bolts (8,8): | | |
|---|---|---|
| **M6** - 11 Nm | **M8** - 25 Nm | **M10** - 50 Nm |
| **M12** - 87 Nm | **M14** - 138 Nm | **M16** - 210 Nm |

### NOTE

After install the towing hitch you should get adequate note in registration book (at authorised service station).The car should be equipped with:

- Indicators
- Tow mirrors

After 1000km of exploitation check all bolts and nuts. The ball of towing hitch must be always kept clear and conserve with a grease.