FITTING INSTRUCTION

Clamp mark in acc. with		Cables joining
ISO	PN	
1	L	Left directional lights
2	+	Rear fog lights
3	31	Ground
4	R	Right directional lights
5	58R	Right side parking lights
6	54	Stoplights
7	58L	Left side parking lights

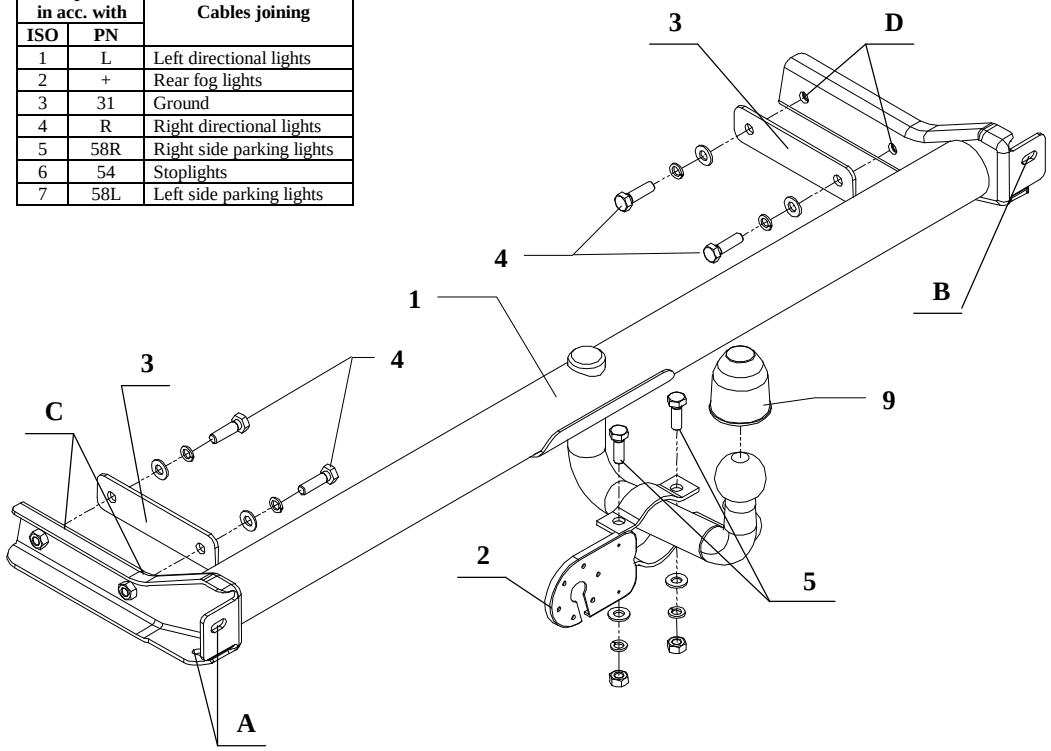

This towbar is designed to assembly in following cars: **VOLKSWAGEN PASSAT CL version I,** produced since 04.1988 till 09.1993 and is prepared to tow trailers max total weight **2000 kg** and max vertical mass **75 kg**.

From manufacturer

Thank you for buying our product. Their reliability has been confirmed in many tests. Reliability of towbar depends also on right assembly and right exploit. For this reasons we kindly ask to read carefully this instruction and apply to hints.

The towbar should be install in points described by a car producer.

The instruction of the assembly

1. Disassemble the bumper and original fastening handles on the left and right side.
2. From inside of the bumper cut out hole (see incision in central part).
3. Fix the bumper to body of the towbar (pos. 1) through holes (pos. A and B). Put ball through executed holes.
4. In this way prepared unit fix to the car through fish-plates (pos. 3) (fish-plates put inside trunk) and through holes (pos. C and D) using bolts M10x35 mm (pos. 4) from towbar accessories.
5. Fix socket plate unit (pos. 2) using bolts M10x30mm (pos. 5) from accessories.
6. Tighten all bolts according to the torque shown in the table.
7. Connect electric wires of 7-pole socket according to the instruction of the car. (Recommend to make at authorized service station).
8. Complete paint layer damaged during installation.

Torque settings for nuts and bolts (8,8):

M8	25 Nm	**M10**	55 Nm
M12	85 Nm	**M14**	135 Nm

NOTE

After install the towbar you should get adequate note in registration book (at authorised service station).The car should be equipped with:

- Indicators
- Tow mirrors

After 1000km of exploitation check all bolts and nuts. The ball of towbar must be always kept clear and conserve with a grease.

Towbar accessories:

Pos. 1 — Name: Body of towbar — Quantity: 1 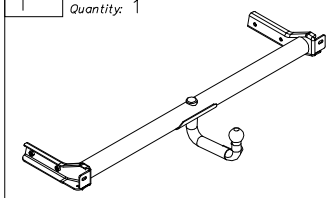	Pos. 4 — Name: Bolt 8,8 B — Quantity: 4 — Dim. : M10x35mm 	Pos. 8 — Name: Spring washer — Quantity: 6 — Dim. : ø 10,2 mm 
	Pos. 5 — Name: Bolt 8,8 B — Quantity: 2 — Dim. : M10x30mm 	Pos. 9 — Name: Ball cover — Quantity: 1 
Pos. 2 — Name: Socket plate — Quantity: 1 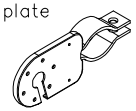	Pos. 6 — Name: Nut 8 B — Quantity: 2 — Dim. : M10 	
Pos. 3 — Name: Fish–plate — Quantity: 2 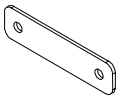	Pos. 7 — Name: Plain washer — Quantity: 6 — Dim. : ø 10,5 mm 	

PPUH AUTO-HAK S.J.

Produkcja Zaczepów Kulowych
Henryk & Zbigniew Nejman
76-200 SŁUPSK ul. Słoneczna 16K
tel/fax (0-59) 8-414-414; 8-414-413
e-mail: office@autohak.com.pl
www. autohak.com.pl

Towing hitch (without electrical set)

Class: **A50-X** Cat. no. **K10**
Designed for:
Manufacturer: **VOLKSWAGEN**
Model: **PASSAT CL**
Type: **version I**
produced **since 04.1988 till 09.1993**

Technical data:
maximum D-value: **9,81 kN**
maximum trailer weight: **2000 kg**
maximum vertical cup mass: **75 kg**

Approval number according to Directive 94/20/EC: e20*94/20*0668*00

Foreword

This towbar is design according to rules of safety traffic regulations. The towing hitch is a safety component and must be installed only by qualified personnel. Any alteration or conversion to the towing hitch is prohibited and would lead to cancellation of design certification. Remove insulating compound and underseal from vehicle (if present) in the area of the matting surfaces of the towing hitch.
The vehicle manufacturer's specifications regarding trailer load and max. vertical cup load are decisive for driving, and values for the towing hitch cannot be exceeded.
D-value formula:

$$\frac{\text{Max trailer weight [kg]} \times \text{Max vehicle weight [kg]}}{\text{Max trailer weight [kg]} + \text{Max vehicle weight [kg]}} \times \frac{9{,}81}{1000} = D\ [\text{kN}]$$