FITTING INSTRUCTION

Clamp mark in acc. with		Cables joining
ISO	PN	
1	L	Left directional lights
2	+	Rear fog lights
3	31	Ground
4	R	Right directional lights
5	58R	Right side parking lights
6	54	Stoplights
7	58L	Left side parking lights

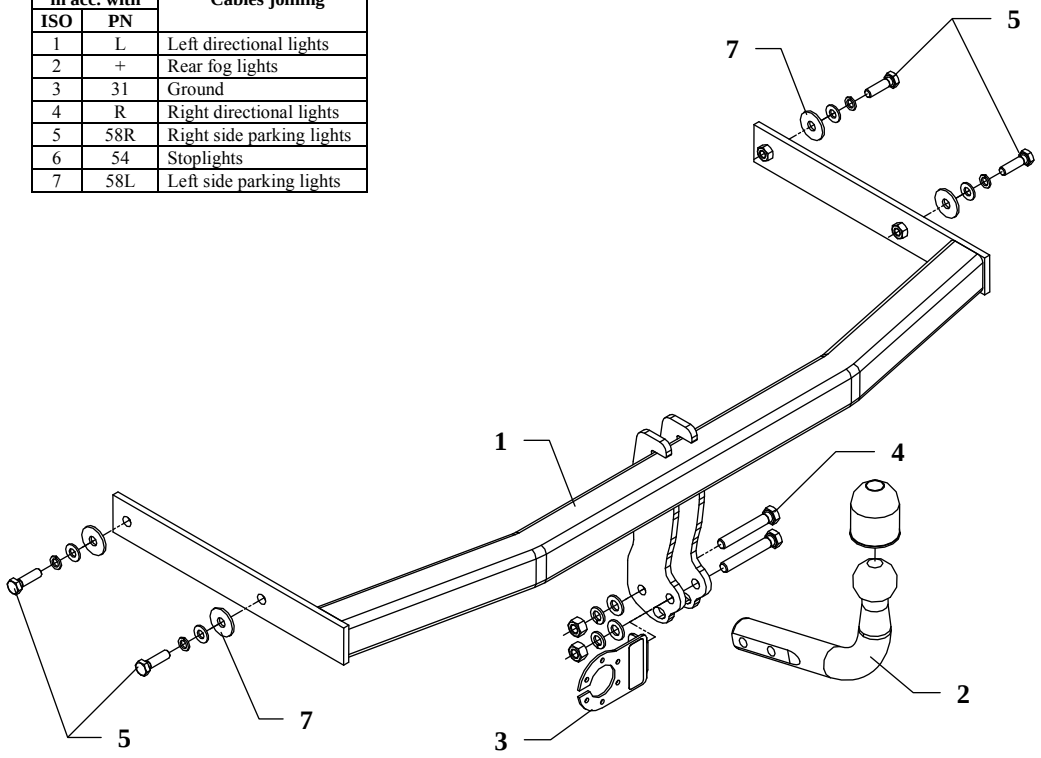

Fig. 1

This towing hitch is designed to assembly in following cars: **SKODA ROOMSTER,** produced since 2006, catalogue no. **H16** and is prepared to tow trailers max total weight **1200 kg** and max vertical load **75 kg**.

From manufacturer

Thank you for buying our product. Their reliability has been confirmed in many tests. Reliability of towing hitch depends also on correct assembly and right operation. For this reasons we kindly ask to read carefully this instruction and apply to hints.

The towing hitch should be install in points described by a car producer.

The instruction of the assembly

1. Disassemble a rear bumper and a metal reinforcement (reinforcement will not be used any more).
2. In chassis members find original prepared holes. They are covered by technical plaster. Unstick the plaster.
3. Put the main bar of the towing hitch (pos. 1) in this way so holes of the towing hitch agree with holes in chassis members and fix using bolts M10x35mm (pos. 5) from towing hitch accessories as shown on figure1.
4. Reassemble the bumper after cut out its fragments according to figure 2.
5. Fix tow-ball (pos. 2) with socket plate (pos. 3) using bolts M12x75mm (pos. 4) from accessories.
6. Tighten all bolts according to the torque shown in the table.
7. Connect electric wires of 7-poles socket according to the instruction of the car. (Recommend to make at authorized service station).
8. Complete paint layer damaged during installation.

Fig. 2

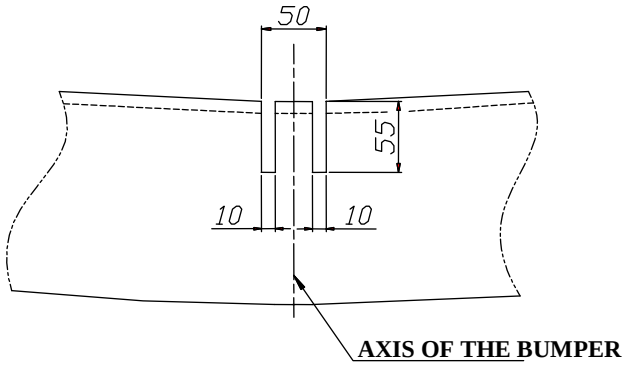

Torque settings for nuts and bolts (8,8):	
M 8 - 25 Nm	**M 10 -** 55 Nm
M 12 - 85 Nm	**M 14 -** 135 Nm

NOTE

After install the towing hitch you should get adequate note in registration book (at authorised service station).The car should be equipped with:

- Indicators
- Tow mirrors

After 1000km check all bolts and nuts. The ball of towing hitch must be always kept clear and conserve with a grease.

Towing hitch accessories:

Pos. 1 — Name: Main bar — Quantity: 1 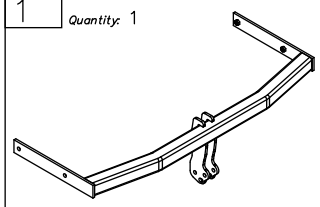	Pos. 5 — Name: Bolt 8,8 B — Quantity: 4 — Dim. : M10x35mm 	Pos. 10 — Name: Spring washer — Quantity: 4 — Dim. : ø 10,2 mm 
	Pos. 6 — Name: Nut 8 B — Quantity: 2 — Dim. : M12 	Pos. 11 — Name: Ball cover — Quantity: 1 
Pos. 2 — Name: Tow ball — Quantity: 1 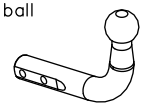	Pos. 7 — Name: Washer — Quantity: 4 — Dim. : ø30xø10,5x2,5mm 	
Pos. 3 — Name: Socket plate — Quantity: 1 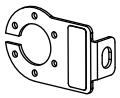	Pos. 8 — Name: Plain washer — Quantity: 2 — Dim. : ø 13 mm 	
Pos. 4 — Name: Bolt 8,8 B — Quantity: 2 — Dim. : M12x75mm 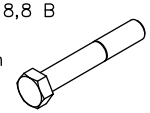	Pos. 9 — Name: Spring washer — Quantity: 2 — Dim. : ø 12,2 mm 	

PPUH AUTO-HAK S.J.

Produkcja Haków Holowniczych
Henryk & Zbigniew Nejman
76-200 SŁUPSK ul. Słoneczna 16K
tel/fax (059) 8-414-414; 8-414-413
E-mail: office@autohak.com.pl
www. autohak.com.pl

Towing hitch (without electrical set)

Class: **A50-X** Cat. no. **H16**
Designed for:
Manufacturer: **SKODA**
Model: **ROOMSTER**
produced since 2006

Technical data:
D-value: **7,02 kN**
maximum trailer weight: **1200 kg**
maximum vertical cup load: **75 kg**

Approval number according to Directive 94/20/EC: e20*94/20*0190*00

Foreword

This towing hitch is designed according to rules of safety traffic regulations. The towing hitch is a safety component and can be install only by qualified personnel. Any alteration or conversion of the towing hitch is prohibited and would lead to cancellation of design certification. Remove insulating compound and underseal from vehicle (if present) in the area of the matting surfaces of the towing hitch.
The vehicle manufacturer's specifications regarding trailer load and max. vertical cup load are decisive for driving whereat values for the towing hitch cannot be exceeded.
D-value formula:

$$\frac{\text{Max trailer weight [kg]} \times \text{Max vehicle weight [kg]}}{\text{Max trailer weight [kg]} + \text{Max vehicle weight [kg]}} \times \frac{9{,}81}{1000} = D\ [\text{kN}]$$