FITTING INSTRUCTION

Clamp mark in acc. with		Cables joining
ISO	PN	
1	L	Left directional lights
2	+	Rear fog lights
3	31	Ground
4	R	Right directional lights
5	58R	Right side parking lights
6	54	Stoplights
7	58L	Left side parking lights

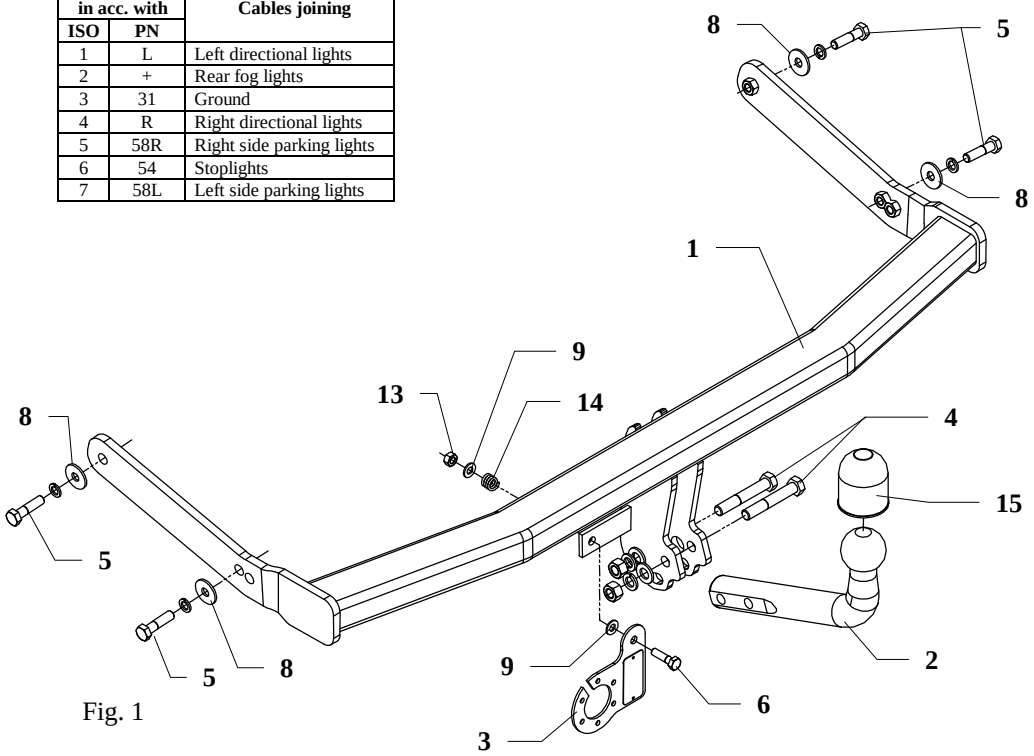

Fig. 1

This towbar is designed to assembly in following car:
SKODA OCTAVIA ESTATE 4x4 produced since 1988 till 12.2003 and **VOLKSWAGEN GOLF IV 5 doors, 4x4** produced since 1998 till 2003**,** catalogue no. **H15** and is prepared to tow trailers max total weight **1650 kg** and max vertical load **75 kg.**

From manufacturer

Thank you for buying our product. Their reliability has been confirmed in many tests. Reliability of towbar depends also on correct assembly and right exploit. For this reasons we kindly ask to read carefully this instruction and apply to hints.

The towbar should be install in points described by a car producer.

The instruction of the assembly

1. Remove the rear bumper and a metal support of bumper (this metal part will not be used any more).
2. Find two holes at the bottom of the car next to a chassis under the conservation layer.
3. Slide the main bar (pos. 1) into the chassis and then fix with M10x40mm bolts (pos. 5) and big washers ø30xø10,5x2,5mm (pos. 8) from the towbar equipment. Choose holes depend on car type.
4. Tighten all nuts and bolts according the torque shown in the table.
5. Position the ball of towbar fix with M12x70mm bolts (pos. 4) from the towbar accessories.
6. Fix the socket plate (pos. 3) as shown on the drawing.
7. Cut the bumper according to figure 2 and mount it to the car.
8. Connect the electric wires according to the instructions of the car. (Recommend to make at authorized service station)
9. Complete the paint cover of towbar (during the mounting paint cover could be destroyed).

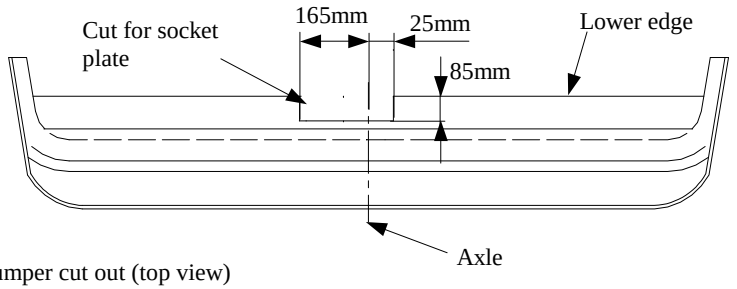

Fig. 2 Bumper cut out (top view)

Torque settings for nuts and bolts (8,8):		
M6 - 11 Nm	**M 8 -** 25 Nm	**M 10 -** 50 Nm
M 12 - 87 Nm	**M 14 -** 138 Nm	**M16 -** 210 Nm

NOTE

After install the towbar you should get adequate note in registration book (at authorised service station).The car should be equipped with:

- Indicators
- Tow mirrors

After 1000km of exploitation check all bolts and nuts. The ball of towbar must be always kept clear and conserve with a grease.

Towbar accessories:

Pos. 1 — Name: Main bar — Quantity: 1 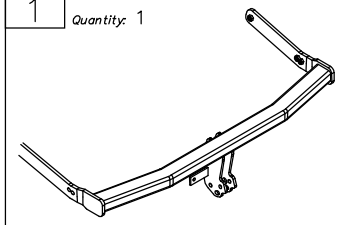	Pos. 5 — Name: Bolt 8,8 B — Quantity: 4 — Dim. : M10x40mm 	Pos. 10 — Name: Spring washer — Quantity: 2 — Dim. : ø 12,2 mm 
	Pos. 6 — Name: Bolt 8,8 B — Quantity: 1 — Dim. : M8x30mm 	Pos. 11 — Name: Spring washer — Quantity: 4 — Dim. : ø 10,2 mm 
Pos. 2 — Name: Tow–ball — Quantity: 1 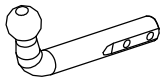	Pos. 7 — Name: Plain washer — Quantity: 2 — Dim. : ø 13 mm 	Pos. 12 — Name: Nut 8 B — Quantity: 2 — Dim. : M12 
Pos. 3 — Name: Socket plate — Quantity: 1 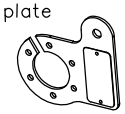	Pos. 8 — Name: Plain washer — Quantity: 4 — Dim. : ø30xø10,5x2,5mm 	Pos. 13 — Name: Nut 8 B — Quantity: 1 — Dim. : M8 
Pos. 4 — Name: Bolt 8,8 B — Quantity: 2 — Dim. : M12x70mm 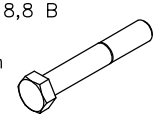	Pos. 9 — Name: Plain washer — Quantity: 2 — Dim. : ø 8,4 mm 	Pos. 14 — Name: Spring — Quantity: 1 
		Pos. 15 — Name: Ball cover — Quantity: 1 

PPUH AUTO-HAK S.J.

Produkcja Zaczepów Kulowych
Henryk & Zbigniew Nejman
76-200 SŁUPSK ul. Słoneczna 16K
tel/fax (059) 8-414-414; 8-414-413
E-mail: office@autohak.com.pl
www. autohak.com.pl

Towing hitch (without electrical set)

Class: **A50-X** Cat. no. **H15**

Designed for:

SKODA OCTAVIA ESTATE, 4x4
produced since 1998 till 12.2003
and VW GOLF IV 5 doors, 4x4
produced since 1998 till 2003

Technical data:
D-value: **9,2 kN**
maximum trailer weight: **1650 kg**
maximum vertical cup load: **75 kg**

Approval number acc. to regulations EKG/ONZ 55.01: E20-55R-01 1497

Foreword

This towbar is designed according to rules of safety traffic regulations. The towing hitch is a safety component and must be installed only by qualified personnel. Any alteration or conversion to the towing hitch is prohibited and would lead to cancellation of design certification. Remove insulating compound and underseal from vehicle (if present) in the area of the matting surfaces of the towing hitch.
The vehicle manufacturer's specifications regarding trailer load and max. vertical cup load are decisive for driving, and values for the towing hitch cannot be exceeded.
D-value formula:

$$\frac{\text{Max trailer weight [kg]} \times \text{Max vehicle weight [kg]}}{\text{Max trailer weight [kg]} + \text{Max vehicle weight [kg]}} \times \frac{9{,}81}{1000} = D\ [\text{kN}]$$