FITTING INSTRUCTION

Clamp mark in acc. with		Cables joining
ISO	PN	
1	L	Left directional lights
2	+	Rear fog lights
3	31	Ground
4	R	Right directional lights
5	58R	Right side parking lights
6	54	Stoplights
7	58L	Left side parking lights

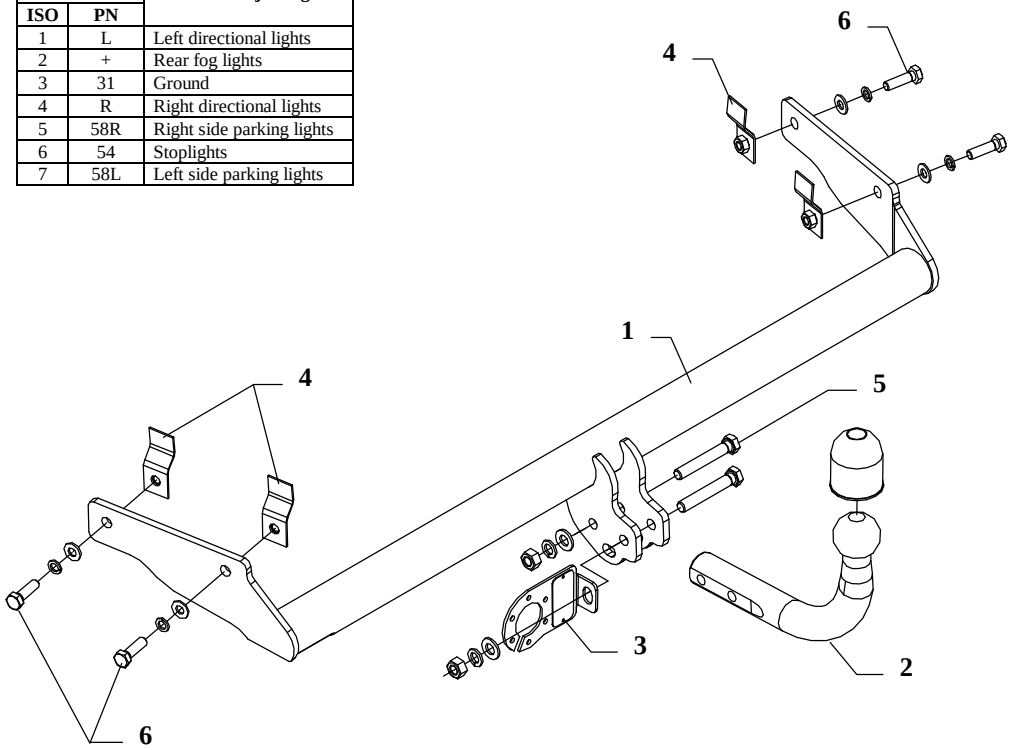

This towbar is designed to assembly in following cars: **SKODA FELICIA 5 door,** produced since 1994 till 2001, catalogue no. **H05** and is prepared to tow trailers max total weight **1000 kg** and max vertical load **50 kg**.

From manufacturer

Thank you for buying our product. Their reliability has been confirmed in many tests. Reliability of towbar depends also on correct assembly and right operation. For this reasons we kindly ask to read carefully this instruction and apply to hints.

The towbar should be install in points described by a car producer.

The instruction of the assembly

1. Place the main bar of the towbar (pos. 1) into the chassis members and then fix with M10x35mm (pos. 6) bolts using washers in two holes per side (at the bottom of the chassis put jibs with the nuts – pos. 4 – through an elongated holes).
2. To so prepared towbar fix the ball of towbar (pos. 2) with the socket plate (pos. 3) using M12x75mm (pos. 5) screws from the towbar accessories.
3. Tighten all nuts and bolts according the torque shown in the table.
4. Connect the electric wires according to the instructions of the car.
5. Complete the paint cover of towbar (during the mounting paint cover could be destroyed).

Torque settings for nuts and bolts (8,8):	
M 8 - 25 Nm	**M 10 -** 55 Nm
M 12 - 85 Nm	**M 14 -** 135 Nm

NOTE

After install the towbar you should get adequate note in registration book (at authorised service station).The car should be equipped with:

- Indicators
- Tow mirrors

After 1000km of exploitation check all bolts and nuts. The ball of towbar must be always kept clear and conserve with a grease.

Towbar accessories:

Pos. 1 — Name: Main bar — Quantity: 1 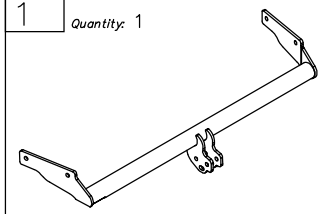	Pos. 4 — Name: Jib with the nut — Quantity: 4 — Dim. : 72x30mm 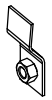	Pos. 8 — Name: Plain washer — Quantity: 2 — Dim. : ø 13 mm 
	Pos. 5 — Name: Bolt 8,8 B — Quantity: 2 — Dim. : M12x75mm 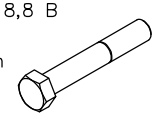	Pos. 9 — Name: Plain washer — Quantity: 4 — Dim. : ø 10,5 mm 
Pos. 2 — Name: Tow ball — Quantity: 1 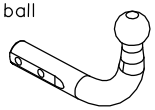	Pos. 6 — Name: Bolt 8,8 B — Quantity: 4 — Dim. : M10x35mm 	Pos. 10 — Name: Spring washer — Quantity: 2 — Dim. : ø 12,2 mm 
Pos. 3 — Name: Socket plate — Quantity: 1 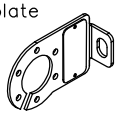	Pos. 7 — Name: Nut 8 B — Quantity: 2 — Dim. : M12 	Pos. 11 — Name: Spring washer — Quantity: 4 — Dim. : ø 10,2 mm 
		Pos. 12 — Name: Ball cover — Quantity: 1 

PPUH AUTO-HAK S. J.

Produkcja Zaczepów Kulowych
Henryk & Zbigniew Nejman
76-200 SŁUPSK ul. Słoneczna 16K
tel/fax (059) 8-414-414; 8-414-413
E-mail: office@autohak.com.pl
www.autohak.com.pl

Towing hitch (without electrical set)

Class: **A50-X** Cat. no. **H05**
Designed for:
Manufacturer: **SKODA**
Model: **FELICIA**
Type: **5door**
produced since 1994 till 2001

Technical data:
D-value: **6,0 kN**
maximum trailer weight: **1000 kg**
maximum vertical cup load: **50 kg**

Approval number acc. to regulations EKG/ONZ 55.01: E20-55R-01 0777

Foreword

This towbar is designed according to rules of safety traffic regulations. The towing hitch is a safety component and can be install only by qualified personnel. Any alteration or conversion of the towing hitch is prohibited and would lead to cancellation of design certification. Remove insulating compound and underseal from vehicle (if present) in the area of the matting surfaces of the towing hitch.
The vehicle manufacturer's specifications regarding trailer load and max. vertical cup load are decisive for driving, and values for the towing hitch cannot be exceeded.
D-value formula:

$$\frac{\text{Max trailer weight [kg]} \times \text{Max vehicle weight [kg]}}{\text{Max trailer weight [kg]} + \text{Max vehicle weight [kg]}} \times \frac{9{,}81}{1000} = D\ [\text{kN}]$$