FITTING INSTRUCTION

Clamp mark in acc. with		Cables joining
ISO	PN	
1	L	Left directional lights
2	+	Rear fog lights
3	31	Ground
4	R	Right directional lights
5	58R	Right side parking lights
6	54	Stoplights
7	58L	Left side parking lights

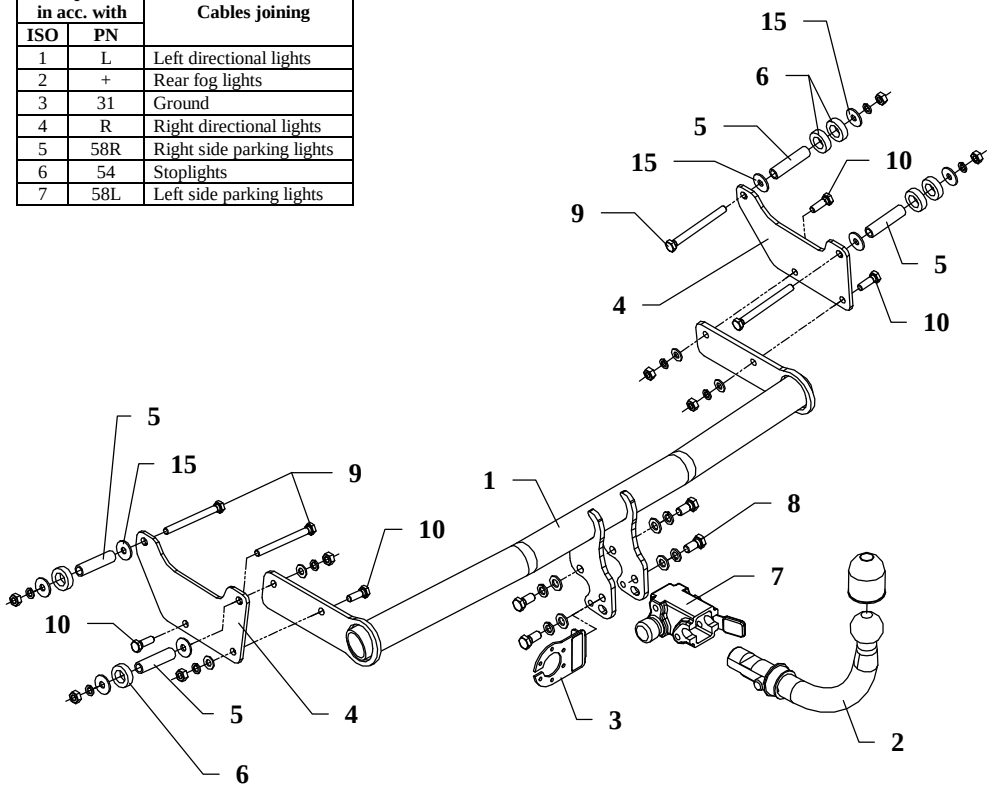

This towing hitch is designed to assembly in following cars: **RENAULT GRAND MODUS,** produced since 2008, catalogue no. **G59A** and is prepared to tow trailers max total weight **1200 kg** and max vertical mass **75 kg**.

From manufacturer

Thank you for buying our product. Their reliability has been confirmed in many tests. Reliability of towing hitch depends also on correct assembly and right operation. For this reasons we kindly ask to read carefully this instruction and apply to hints.

The towing hitch should be install in points described by a car producer.

The instruction of the assembly

1. Remove any stickers in the chassis members that may be present at the points of attachment.
2. Fix loosely side brackets (pos. 4) to chassis members using bolts M10x110mm (pos. 9) as one showed on the drawing.
3. Slip the main bar of the towing hitch (pos. 1) between installed side brackets and fix using bolts M10x30mm (pos. 10) as one showed on the drawing.
4. Fix body of the automat (pos. 7) and the socket plate (pos. 3) using bolts M12x25mm (pos. 4) from accessories. Place tow-ball (pos. 2) according to supplied instruction.
5. Tighten all bolts according to the torque shown in the table.
6. Connect electric wires of 7-poles socket according to the instruction of the car. (Recommend to make at authorized service station).
7. Complete paint layer damaged during installation.

Torque settings for nuts and bolts (8,8):		
M6 - 11 Nm	**M 8 -** 25 Nm	**M 10 -** 50 Nm
M 12 - 87 Nm	**M 14 -** 138 Nm	**M16** - 210 Nm

NOTE

After install the towing hitch you should get adequate note in registration book (at authorised service station). The car should be equipped with:

- Indicators
- Tow mirrors

After 1000km check all bolts and nuts. The ball of towing hitch must be always kept clear and conserve with a grease.

Towing hitch accessories:

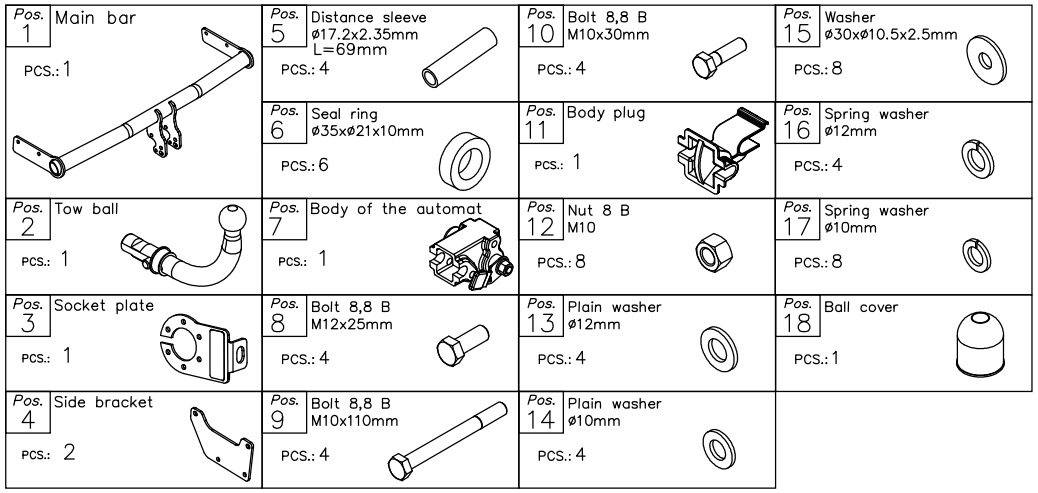

PPUH AUTO-HAK S.J.

Produkcja Zaczepów Kulowych
Henryk & Zbigniew Nejman
76-200 SŁUPSK ul. Słoneczna 16K
tel/fax (059) 8-414-414; 8-414-413
E-mail: office@autohak.com.pl
www.autohak.com.pl

Towing hitch (without electrical set)

Class: **A50-X** Cat. no. **G59A**
Designed for:
Manufacturer: **RENAULT**
Model: **GRAND MODUS**
produced since 2008

Technical data:
D-value: **6,94 kN**
maximum trailer weight: **1200 kg**
maximum vertical cup mass: **75 kg**

Approval number according to Directive 94/20/EC: e20*94/20*0840*00

Foreword

This towing hitch is designed according to rules of safety traffic regulations. The towing hitch is a safety component and can be install only by qualified personnel. Any alteration or conversion of the towing hitch is prohibited and would lead to cancellation of design certification. Remove insulating compound and underseal from vehicle (if present) in the area of the matting surfaces of the towing hitch.
The vehicle manufacturer's specifications regarding trailer mass and max. vertical cup mass are decisive for driving whereat values for the towing hitch cannot be exceeded.
D-value formula:

$$\frac{\text{Max trailer weight [kg]} \times \text{Max vehicle weight [kg]}}{\text{Max trailer weight [kg]} + \text{Max vehicle weight [kg]}} \times \frac{9{,}81}{1000} = D\ [\text{kN}]$$