Towbar accessories:

Pos. 1 Name: Main bar Quantity: 1 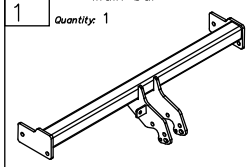	Pos. 7 Name: Distance sleeve Quantity: 2 Dim. : ø17,2x2,35mm L=64mm 	Pos. 14 Name: Washer Quantity: 2 Dim. : ø35xø12x3mm 	Pos. 21 Name: Body of the automat Quantity: 1 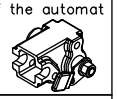
	Pos. 8 Name: Bolt 8,8 B Quantity: 4 Dim. : M12x25mm 	Pos. 15 Name: Plain washer Quantity: 8 Dim. : ø 13 mm 	Pos. 22 Name: Bolt 8,8 B Quantity: 1 Dim. : M8x30mm 
Pos. 2 Name: Tow ball Quantity: 1 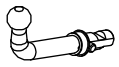	Pos. 9 Name: Bolt 8,8 B Quantity: 2 Dim. : M10x100mm 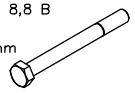	Pos. 16 Name: Plain washer Quantity: 2 Dim. : ø 10,5 mm 	Pos. 23 Name: Plain washer Quantity: 2 Dim. : ø 8,5 mm 
Pos. 3 Name: Socket plate Quantity: 1 	Pos. 10 Name: Bolt 8,8 B Quantity: 4 Dim. : M12x35mm 	Pos. 17 Name: Plain washer Quantity: 4 Dim. : ø 8,5 mm 	Pos. 24 Name: Nut 8 B Quantity: 1 Dim. : M8 
Pos. 4 Name: Right bracket Quantity: 1 	Pos. 11 Name: Bolt 8,8 B Quantity: 4 Dim. : M8x35mm 	Pos. 18 Name: Spring washer Quantity: 8 Dim. : ø 12,2 mm 	Pos. 25 Name: Spring Quantity: 1 
Pos. 5 Name: Left bracket Quantity: 1 	Pos. 12 Name: Nut 8 B Quantity: 4 Dim. : M12 	Pos. 19 Name: Spring washer Quantity: 2 Dim. : ø 10,2 mm 	Pos. 22 Name: Body plug Quantity: 1 
Pos. 6 Name: Fish–plate Quantity: 2 	Pos. 13 Name: Nut 8 B Quantity: 2 Dim. : M10 	Pos. 20 Name: Spring washer Quantity: 4 Dim. : ø 8,2 mm 	Pos. 23 Name: Ball cover Quantity: 1 

PPUH AUTO-HAK Sp.J.

Produkcja Zaczepów Kulowych
Henryk & Zbigniew Nejman
76-200 SŁUPSK ul. Słoneczna 16K
tel/fax (059) 8-414-414; 8-414-413
E-mail: office@autohak.com.pl
www. autohak.com.pl

Towing hitch (without electrical set)

Class: **A50-X** Cat. no. **G38A**
Designed for:
Manufacturer: **RENAULT**
Model: **LAGUNA**
Type: **ESTATE**
produced since 2001 till 2007

Technical data:
D-value: **8,56 kN**
maximum trailer weight: **1500 kg**
maximum vertical cup load: **75 kg**

Approval number according to Directive 94/20/EC: e20*94/20*1095*00

Foreword

This towing hitch is designed according to rules of safety traffic regulations. The towing hitch is a safety component and can be install only by qualified personnel. Any alteration or conversion of the towing hitch is prohibited and would lead to cancellation of design certification. Remove insulating compound and underseal from vehicle (if present) in the areas of the matting surfaces of the towing hitch.
The vehicle manufacturer's specifications regarding trailer load and max. vertical cup mass are decisive for driving whereat values for the towing hitch cannot be exceeded.
D-value formula:

$$\frac{\text{Max trailer weight [kg]} \times \text{Max vehicle weight [kg]}}{\text{Max trailer weight [kg]} + \text{Max vehicle weight [kg]}} \times \frac{9{,}81}{1000} = D\ [\text{kN}]$$

FITTING INSTRUCTION

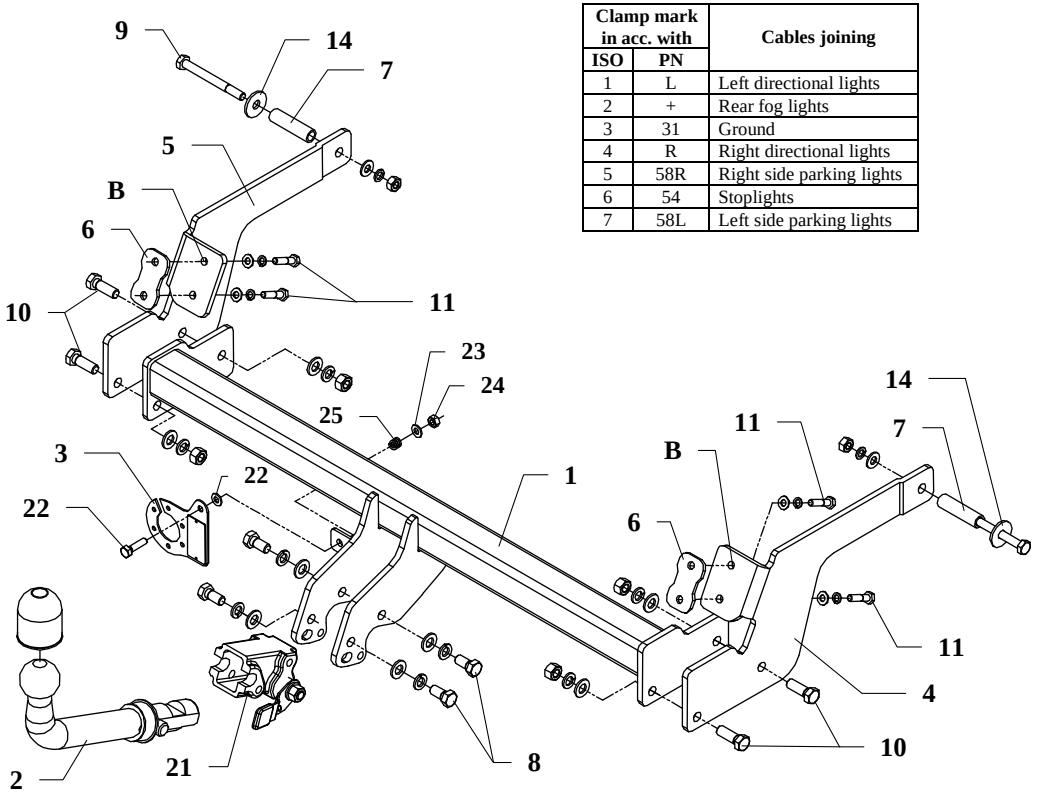

Clamp mark in acc. with		Cables joining
ISO	PN	
1	L	Left directional lights
2	+	Rear fog lights
3	31	Ground
4	R	Right directional lights
5	58R	Right side parking lights
6	54	Stoplights
7	58L	Left side parking lights

This towbar is designed to assembly in following cars: **RENAULT LAGUNA ESTATE,** produced since 2001 till 2007, catalogue number **G38A** and is prepared to tow trailers max total weight **1500 kg** and max vertical load **75 kg.**

From manufacturer

Thank you for buying our product. Their reliability has been confirmed in many tests. Reliability of towbar depends also on correct assembly and right operation. For this reasons we kindly ask to read carefully this instruction and apply to hints.

The towbar should be install in points described by a car producer.

The instruction of the assembly

1. Find blind holes M8 in bottom part of the car (in left and right side) and make it clear.
2. Disassemble a plastic cover.
3. Take out plugs from the chassis members (internal side) and put in this places distance sleeves 9 (pos. 7) from accessories.
4. Fix side brackets (pos. 4 and 5) to the chassis with bolts M10x100mm (pos. 9) and bolts M8x35mm (pos. 11) as shown in the drawing.
   NOTE !!! Between brackets 4 and 5 and body of a car put washers pos. 6.
5. Between side brackets put main bar of the towbar (pos. 1) and fix by bolts M12x35mm (pos. 10).
6. Tighten all screw according to the torque shown in the table.
7. Fix plastic cover.
8. Fix body of the automat (pos. 21) using bolts M12x25mm (pos. 8) from accessories. Place tow-ball (pos. 2) according to supplied instruction.
9. Fix the socket plate (pos. 3) as shown on the drawing.
10. Connect the electric wires according to the instructions of the car. (Recommended to make at service station)
11. Supplement the paint coating damaged during assembly.

Torque settings for nuts and bolts (8,8):

M6 - 11 Nm	**M8** - 25 Nm	**M10** - 50 Nm
M12 - 87 Nm	**M14** - 138 Nm	**M16** - 210 Nm

NOTE

After install the towbar you should get adequate note in registration book (at authorised service station).The car should be equipped with:

- Indicators
- Tow mirrors

After 1000km of exploitation check all bolts and nuts. The ball of towbar must be always kept clear and conserve with a grease.