FITTING INSTRUCTION

Clamp mark in acc. with		Cables joining
ISO	PN	
1	L	Left directional lights
2	+	Rear fog lights
3	31	Ground
4	R	Right directional lights
5	58R	Right side parking lights
6	54	Stoplights
7	58L	Left side parking lights

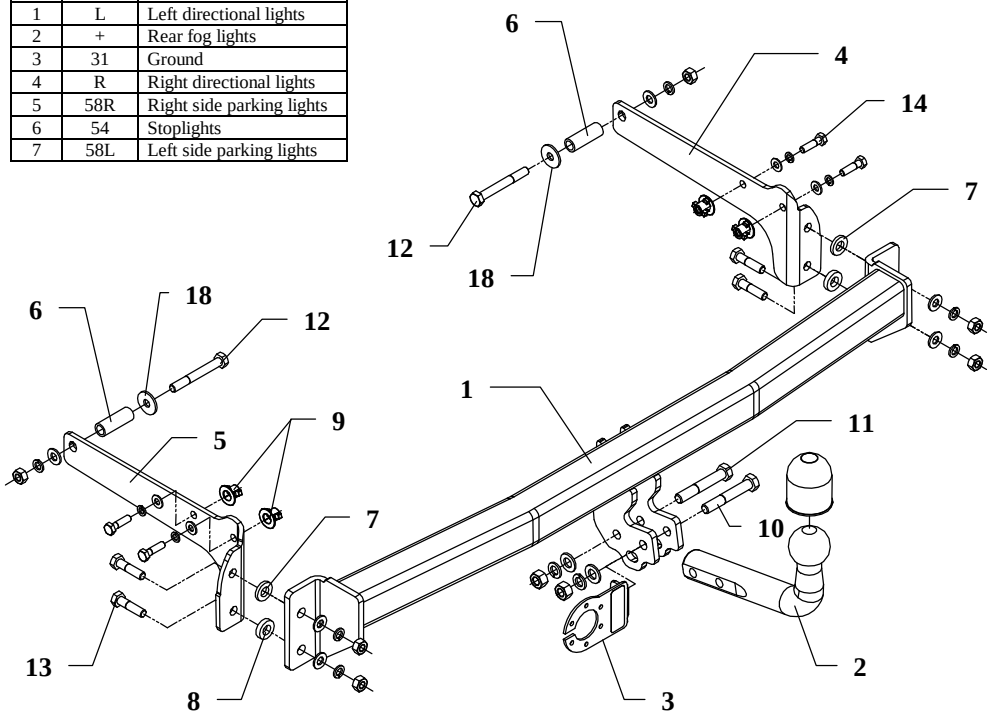

This towbar is designed to assembly in following cars: **RENAULT CLIO I, 3/5 doors,** catalogue no. **G34** , produced since 1990 till 02.1998 and is prepared to tow trailers max total weight **1100 kg** and max vertical load **75 kg.**

From manufacturer

Thank you for buying our product. Their reliability has been confirmed in many tests. Reliability of towbar depends also on correct assembly and correct exploitation. For this reasons we kindly ask to read carefully this instruction and apply to hints.

The towbar should be install in points described by a car producer.

Assemble instruction

1. Take out the spare wheel.
2. Disassemble the bumper.
3. To the left and right chassis member put 4 basket nut (pos. 9) – per 2 a side, in original prepared holes .
4. Put side brackets (pos. 4 and 5) to the frame and fix by bolts M8x30mm (pos. 14) and with basket nut in members (loosely) as show in the drawing.
5. Through original holes in the frame put sleeve (pos. 6) with washers (pos. 18) and fix to brackets (pos. 4 and 5) using bolts M10x80mm (pos. 12) as shown in the drawing.
6. To fastened brackets fix body of the towing hitch (pos. 1) by bolts M10x40mm (pos. 13). Take a note of sleeve (pos. 7 and 8) placement, see drawing.
7. Reassemble the bumper (Without three bolts in central part of the bumper – place lack).
8. Fix tow ball (pos. 2) using bolt M12x75mm (pos. 10) and M12x70mm (pos. 11). With bolt M12x75mm fix also a socket plate (pos. 3). See figure 1.
9. Tighten all bolts according to the torque shown in the table.
10. Connect electric wires of 7-pole socket according to the instruction of the car. (Recommend to make at authorized service station)
11. Complete paint layer damaged during installation.

Torque settings for nuts and bolts (8,8):	
M 8 - 25 Nm	**M 10 -** 55 Nm
M 12 - 85 Nm	**M 14 -** 135 Nm

NOTE

After install the towbar you should get adequate note in registration book (at authorised service station).The car should be equipped with:

- Indicators
- Tow mirrors

After 1000km check all bolts and nuts. The ball of towbar must be always kept clear and conserve with a grease.

Towbar accessories:

Pos. 1 Main bar PCS.: 1 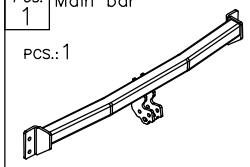	Pos. 6 Distance sleeve ø17.2x2.3mm L=48mm PCS.: 2 	Pos. 12 Bolt 8,8 B M10x80mm PCS.: 2 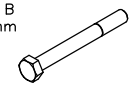	Pos. 18 Plain washer ø30xø10.5x2.5mm PCS.: 2 
	Pos. 7 Distance sleeve ø25xø13mm L=4mm PCS.: 2 	Pos. 13 Bolt 8,8 B M10x40mm PCS.: 4 	Pos. 19 Plain washer ø10.5mm PCS.: 6 
Pos. 2 Tow ball PCS.: 1 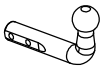	Pos. 8 Distance sleeve ø25xø13mm L=6mm PCS.: 2 	Pos. 14 Bolt 8,8 B M8x30mm PCS.: 4 	Pos. 20 Plain washer ø8.5mm PCS.: 4 
Pos. 3 Socket plate PCS.: 1 	Pos. 9 Special nut M8 PCS.: 4 	Pos. 15 Nut 8 B M12 PCS.: 2 	Pos. 21 Spring washer ø12.2mm PCS.: 2 
Pos. 4 Right bracket PCS.: 1 	Pos. 10 Bolt 8,8 B M12x75mm PCS.: 1 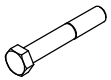	Pos. 16 Nut 8 B M10 PCS.: 6 	Pos. 22 Spring washer ø10.2mm PCS.: 6 
Pos. 5 Left bracket PCS.: 1 	Pos. 11 Bolt 8,8 B M12x70mm PCS.: 1 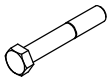	Pos. 17 Plain washer ø13mm PCS.: 2 	Pos. 23 Spring washer ø8.2mm PCS.: 4 
			Pos. 24 Ball cover PCS.: 1 

PPUH AUTO-HAK S. J.

Produkcja Haków Holowniczych
Henryk & Zbigniew Nejman
76-200 SŁUPSK ul. Słoneczna 16K
tel/fax (059) 8-414-414; 8-414-413
E-mail: office@autohak.com.pl
www.autohak.com.pl

Towing hitch (without electrical set)

Class: **A50-X** Cat. no. **G34**
Designed for:
Manufacturer: **RENAULT**
Model: **CLIO I**
Type: **3/5 doors**
produced since 1990 till 02.1998

Technical data:
D-value: **6,04 kN**
maximum trailer weight: **1100 kg**
maximum vertical cup load: **75 kg**

Approval number acc. to regulations EKG/ONZ 55.01: E20-55R-01 1500

Foreword

This towbar is design according to rules of safety traffic regulations. The towing hitch is a safety component and must be installed only by qualified personnel. Any alteration or conversion to the towinh hitch is prohibited and would lead to cancellation of design certification. Remove insulating compound and underseal from vehicle (if present) in the area of the matting surfaces of the towing hitch.

The vehicle manufacturer's specifications regarding trailer load and max. vertical cup load are decisive for driving, and values for the towing hitch must not be exceeded.

D-value formula:

$$\frac{\text{Max trailer weight [kg]} \times \text{Max vehicle weight [kg]}}{\text{Max trailer weight [kg]} + \text{Max vehicle weight [kg]}} \times \frac{9{,}81}{1000} = D\ [\text{kN}]$$