FITTING INSTRUCTION

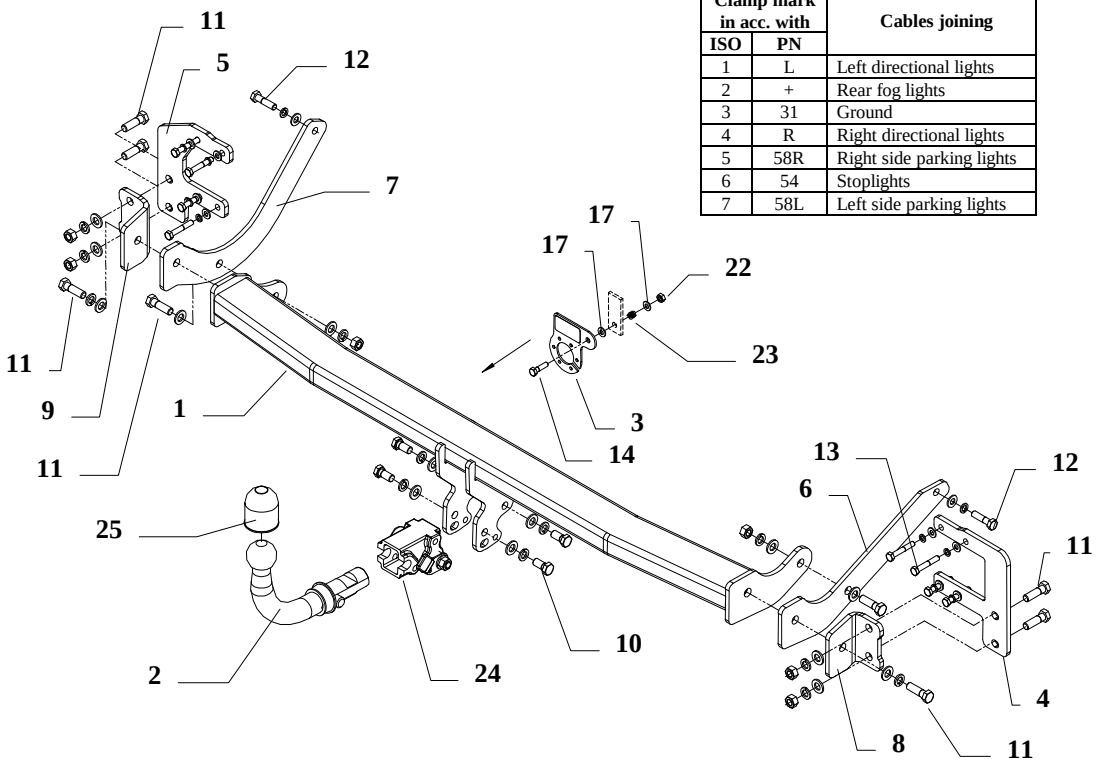

Clamp mark in acc. with		Cables joining
ISO	PN	
1	L	Left directional lights
2	+	Rear fog lights
3	31	Ground
4	R	Right directional lights
5	58R	Right side parking lights
6	54	Stoplights
7	58L	Left side parking lights

This towbar is designed to assembly in following car: **PEUGEOT 407 4 doors,** produced since 2004 till 08.2008, catalogue number **F29A** and is prepared to tow trailers max total weight **1600 kg** and max vertical load **65 kg**.

From manufacturer

Thank you for buying our product. Their reliability has been confirmed in many tests. Reliability of towbar depends also on correct assembly and right operation. For this reasons we kindly ask to read carefully this instruction and apply to hints.

The towbar should be install in points described by a car producer.

The instruction of the assembly

1. Disassemble rear lights.
2. Disassemble bumper cover. Under cover is placed plastic reinforcement. On the left side of this reinforcement unscrew 4 bolts M8. Put left fishplate (pos. 5) in this way, so 4 holes in the fishplate agree with holes in the reinforcement. Fix loosely using bolts M8x50mm (pos. 13) from accessories, remember – put 2 bolts M12x40mm (pos. 11) before fix, see drawing.
3. Next make the same actions on the right side. Unscrew 4 original bolts M8. Put right fishplate (pos. 4) in this way, so 4 holes in the fishplate agree with holes in the reinforcement. Fix loosely using bolts M8x50mm (pos. 13), remember – put 2 bolts M12x40mm (pos. 11) before fix, see drawing.
4. On protruding from fish-plates bolts M12 put side brackets pos. 8 and 9, next fix it by bolts M12x40mm (pos. 11).
5. In chassis members find plugged holes (per one on each side), the outside. Unlock them.
6. According to the drawing put side handles pos. 6 and 7 and fix it by bolts M10x40mm (pos. 12) to chassis members and next between mounted elements put main bar of the towbar (pos. 1) and fix it to already mounted side elements by bolts M12x40mm (pos. 11).
7. Tighten all bolts according to the torque shown in the table.
8. Fix body of the automat (pos. 24) using bolts M12x25mm (pos. 10) from accessories. Place tow-ball (pos. 2) according to supplied instruction.
9. Fix the socket plate (pos. 3) as shown on the drawing.
10. Reinstall the bumper after remove element show on figure 2.
11. Connect electric wires of 7-poles socket according to the instruction of the car. (Recommend to make at authorized service station)
12. Complete paint layer damaged during installation.

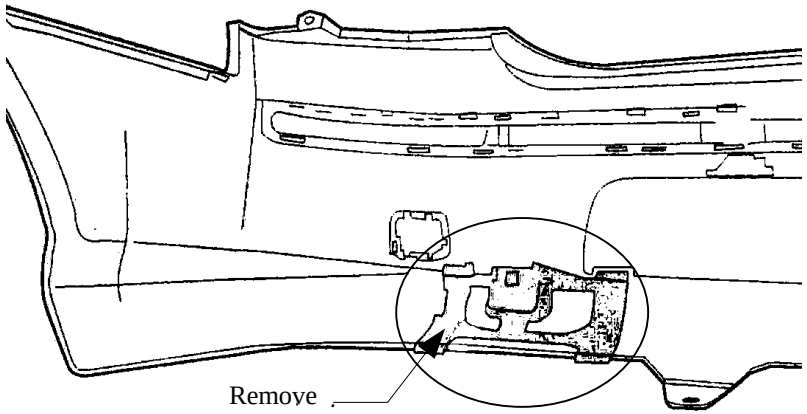

Fig. 2

Towbar accessories:

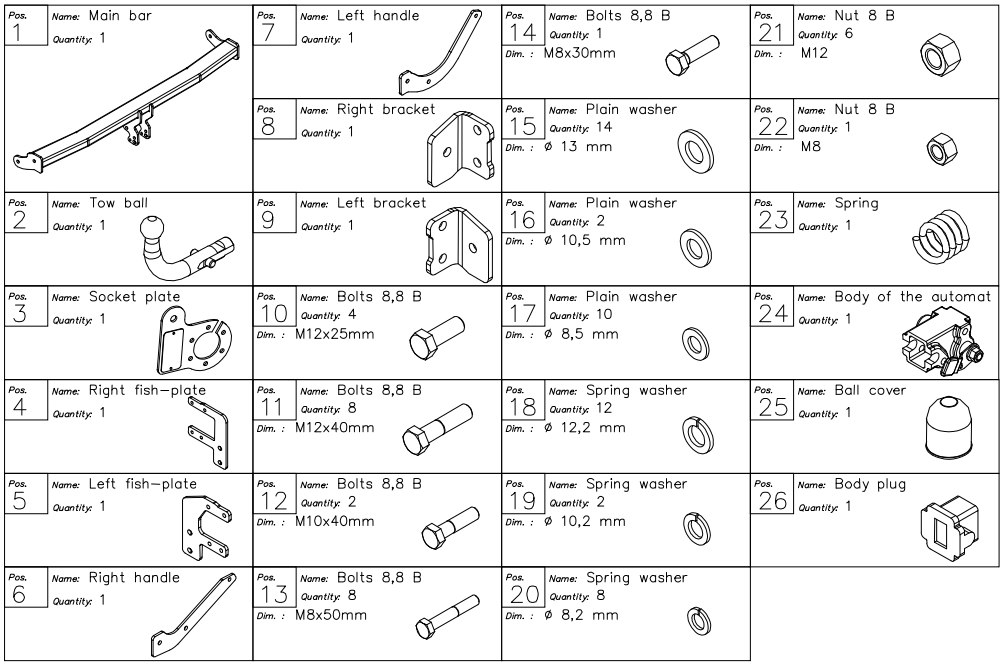

NOTE

After install the towbar you should get adequate registration in registration book (at authorised service station).The car should be equipped with:

- Indicators
- Tow mirrors

After 1000km check all screws. The ball of towbar must be always kept clear and conserve with a grease.

PPUH AUTO-HAK Sp.J.

Produkcja Zaczepów Kulowych
Henryk & Zbigniew Nejman
76-200 SŁUPSK ul. Słoneczna 16K
tel/fax (059) 8-414-414; 8-414-413
E-mail: office@autohak.com.pl
www. autohak.com.pl

Towing hitch (without electrical set)

Class: **A50-X** Cat. no. **F29A**
Designed for:
Manufacturer: **PEUGEOT**
Model: **407**
Type: **4 doors**
produced since 2004 till 08.2008

Technical data:
D-value: **9,1 kN**
maximum trailer weight: **1600 kg**
maximum vertical cup load: **65 kg**

Approval number acc. to regulations EKG/ONZ 55.01: E20 55R-01 1607

Torque settings for nuts and bolts (8,8):		
M6 - 11 Nm	**M8** - 25 Nm	**M10** - 50 Nm
M12 - 87 Nm	**M14** - 138 Nm	**M16** - 210 Nm

Foreword

This towbar is designed according to rules of safety traffic regulations. The towing hitch is a safety component and must be installed only by qualified personnel. Any alteration or conversion to the towing hitch is prohibited and would lead to cancellation of design certification. Remove insulating compound and under seal from vehicle (if present) in the area of the matting surfaces of the towing hitch.
The vehicle manufacturer's specifications regarding trailer load and max. vertical cup load are decisive for driving, and values for the towing hitch cannot be exceeded.
D-value formula:

$$\frac{\text{Max trailer weight [kg]} \times \text{Max vehicle weight [kg]}}{\text{Max trailer weight [kg]} + \text{Max vehicle weight [kg]}} \times \frac{9{,}81}{1000} = D\ [\text{kN}]$$