Towbar accessories:

Pos. 1 Main bar PCS.: 1 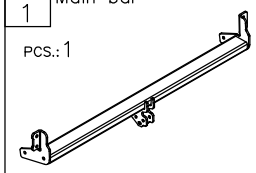	Pos. 6 Right bracket PCS.: 1 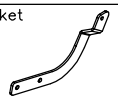	Pos. 12 Bolt 8,8 B M8x45mm PCS.: 1 	Pos. 18 Spring washer ø8,2mm PCS.: 8 
	Pos. 7 Left bracket PCS.: 1 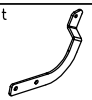	Pos. 13 Plain washer ø13mm PCS.: 12 	Pos. 19 Nut 8 B M12 PCS.: 8 
Pos. 2 Tow ball PCS.: 1 	Pos. 8 Bolt 8,8 B M12x70mm PCS.: 2 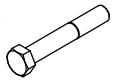	Pos. 14 Plain washer ø10,5mm PCS.: 2 	Pos. 20 Nut 8 B M8 PCS.: 1 
Pos. 3 Socket plate PCS.: 1 	Pos. 9 Bolt 8,8 B M12x40mm PCS.: 8 	Pos. 15 Plain washer ø8,5mm PCS.: 10 	Pos. 21 Spring PCS.: 1 
Pos. 4 Right fish–plate PCS.: 1 	Pos. 10 Bolt 8,8 B M10x40mm PCS.: 2 	Pos. 16 Spring washer ø12,2mm PCS.: 10 	Pos. 22 Ball cover PCS.: 1 
Pos. 5 Left fish–plate PCS.: 1 	Pos. 11 Bolt 8,8 B M8x50mm PCS.: 8 	Pos. 17 Spring washer ø10,2mm PCS.: 2 	

PPUH AUTO-HAK Sp.J.

Produkcja Zaczepów Kulowych
Henryk & Zbigniew Nejman
76-200 SŁUPSK ul. Słoneczna 16K
tel/fax (059) 8-414-414; 8-414-413
E-mail: office@autohak.com.pl
www. autohak.com.pl

Towing hitch (without electrical set)

Class: **A50-X** Cat. no. **F28**
Designed for:
Manufacturer: **PEUGEOT**
Model: **407 SW**
Type: **ESTATE**
produced since 2004 till 08.2008

Technical data:
D-value: **9,5 kN**
maximum trailer weight: **1600 kg**
maximum vertical cup load: **65 kg**

Approval number according to Directive 94/20/EC: e20*94/20*0213*00

Foreword

This towing hitch is designed according to rules of safety traffic regulations. The towing hitch is a safety component and can be install only by qualified personnel. Any alteration or conversion of the towing hitch is prohibited and would lead to cancellation of design certification. Remove insulating compound and underseal from vehicle (if present) in the areas of the matting surfaces of the towing hitch.
The vehicle manufacturer's specifications regarding trailer load and max. vertical cup mass are decisive for driving whereat values for the towing hitch cannot be exceeded.
D-value formula:

$$\frac{\text{Max trailer weight [kg]} \times \text{Max vehicle weight [kg]}}{\text{Max trailer weight [kg]} + \text{Max vehicle weight [kg]}} \times \frac{9{,}81}{1000} = D\ [\text{kN}]$$

FITTING INSTRUCTION

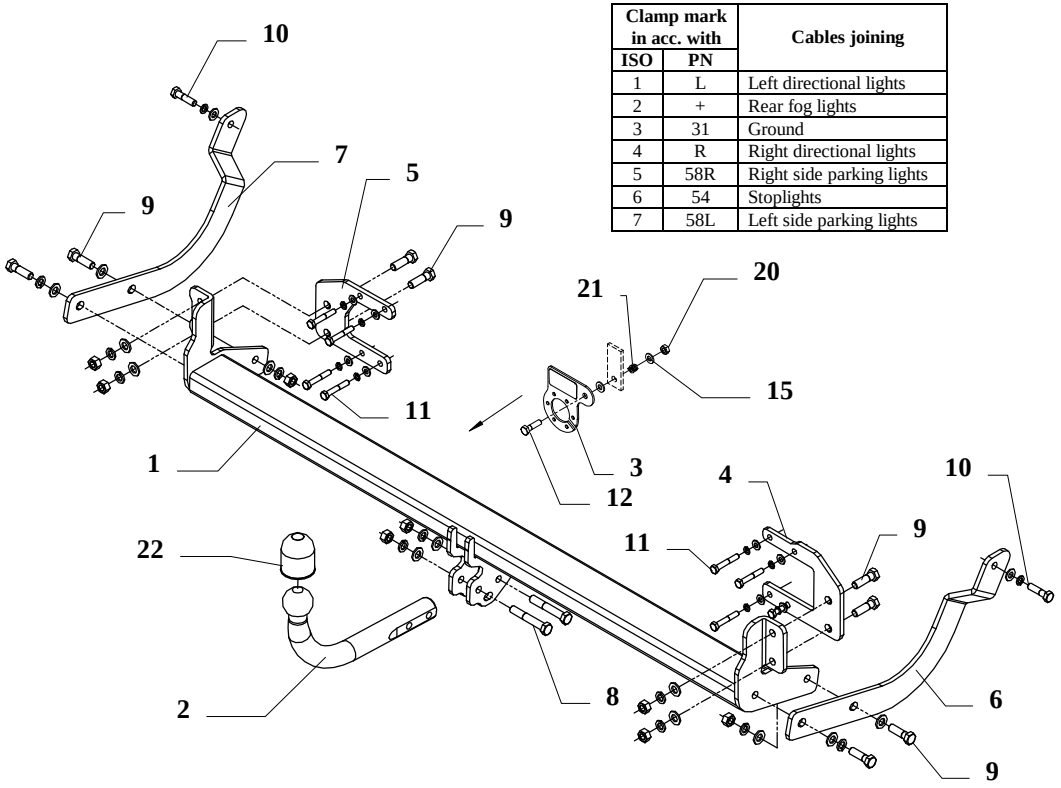

Clamp mark in acc. with		Cables joining
ISO	PN	
1	L	Left directional lights
2	+	Rear fog lights
3	31	Ground
4	R	Right directional lights
5	58R	Right side parking lights
6	54	Stoplights
7	58L	Left side parking lights

This towbar is designed to assembly in following car: **PEUGEOT 407SW (ESTATE),** produced since 2004 till 08.2008, catalogue number **F28** and is prepared to tow trailers max total weight **1600 kg** and max vertical load **65 kg**.

Foreword

Thank you for buying our product. This towbar is design according to rules of safety traffic regulations and their reliability has been confirmed in many tests. Reliability of towbar also depends on correct assembly and correct exploitation. For this reasons we kindly ask to read carefully this instruction and apply to hints.

The towbar should be install in places described by a car producer.

The instruction of the assembly

1. Disassemble rear lights.
2. Disassemble bumper cover. Under cover is placed plastic reinforcement. On the left side of this reinforcement unscrew 4 bolts M8. Put left fishplate (pos. 5) in this way, so 4 holes in the fishplate agree with holes in the reinforcement. Fix loosely using bolts M8x50mm (pos. 11) from accessories, remember – put 2 bolts M12x40mm (pos. 9) before fix, see drawing.
3. Next make the same actions on the right side. Unscrew 4 original bolts M8. Put right fishplate (pos. 4) in this way, so 4 holes in the fishplate agree with holes in the reinforcement. Fix loosely using bolts M8x50mm (pos. 11), remember – put 2 bolts M12x40mm (pos. 9) before fix, see drawing.
4. Next put main bar of the towbar (pos. 1) on bolts M12x40mm in fishplates. Fix it using nuts M12 and washers from accessories.
5. In chassis members find plugged holes (per one on each side), the outside. Unlock them.
6. According to the drawing put side handles pos. 6 and 7 and fix it by bolts M10x40mm (pos. 10) to chassis members and by bolts M12x40mm (pos. 9) to main bar of the towbar (pos. 1).
7. Tighten all bolts according to the torque shown in the table.
8. Fix the socket plate (pos. 3) as shown on the drawing.
9. Fix tow-ball (pos. 2) using bolts M12x70mm (pos. 8) from accessories.
10. Connect electric wires of 7-poles socket according to the instruction of the car. (Recommend to make at authorized service station)
11. Complete paint layer damaged during installation.

Torque settings for nuts and bolts (8,8):		
M6 - 11 Nm	**M8** - 25 Nm	**M10** - 50 Nm
M12 - 87 Nm	**M14** - 138 Nm	**M16** - 210 Nm

NOTE

After install the towbar you should get adequate registration in registration book (at authorised service station).The car should be equipped with:

- Indicators
- Tow mirrors

After 1000km of exploitation check all bolts and nuts. The ball of towbar must be always kept clear and conserve with a grease.