FITTING INSTRUCTION

Clamp mark in acc. with		Cables joining
ISO	PN	
1	L	Left directional lights
2	+	Rear fog lights
3	31	Ground
4	R	Right directional lights
5	58R	Right side parking lights
6	54	Stoplights
7	58L	Left side parking lights

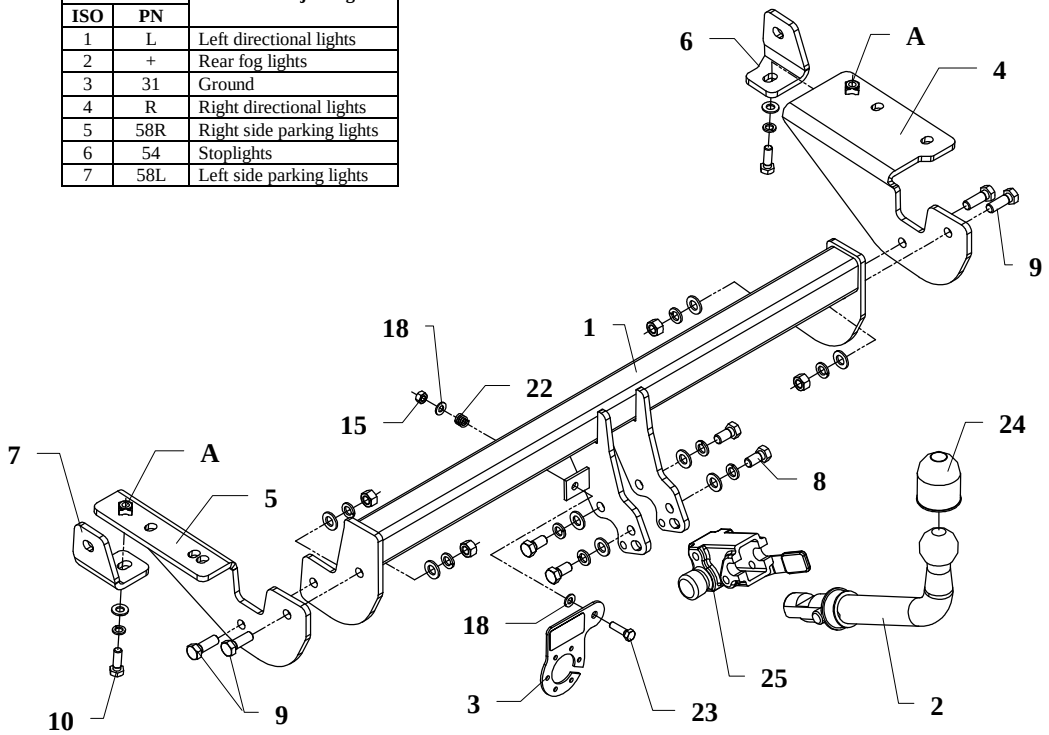

This towbar is designed to assembly in following cars: **PEUGEOT 307SW (ESTATE),** produced since 2001, catalogue number **F25A** and is prepared to tow trailers max total weight **1500 kg** and max vertical load **60 kg**.

From manufacturer

Thank you for buying our product. Their reliability has been confirmed in many tests. Reliability of towbar depends also on correct assembly and right operation. For this reasons we kindly ask to read carefully this instruction and apply to hints.

The towbar should be install in points described by a car producer.

The instruction of the assembly

1. Disassemble handles of the bumper.
2. Put supports of the towbar on chassis member pins and fix loosely:
   - Left side element signed F 25 L (pos. 5)
   - Right side signed F 25 P (pos. 4)
3. Slide the bar of towbar between supports and fix it with M12x35mm (pos. 9)
4. Put supports (pos. 6 and 7 on pins placed at the side of the chassis member and on supports 4 and 5 holes (pos. A), then fix it as it shown fig 1.
5. Cut the handle of the bumper according to fig. 2 (if necessary).
6. Fix body of the automat (pos. 25) using bolts M12x25mm (pos. 8) from accessories. Place tow-ball (pos. 2) according to supplied instruction.
7. Fix the socket plate (pos. 3) as shown on the drawing.
8. Tighten all nuts and bolts according to the torque shown in the table
9. Connect the electric wires according to the instructions of the car
10. Complete the paint cover of towbar (during the mounting paint cover could be destroyed)

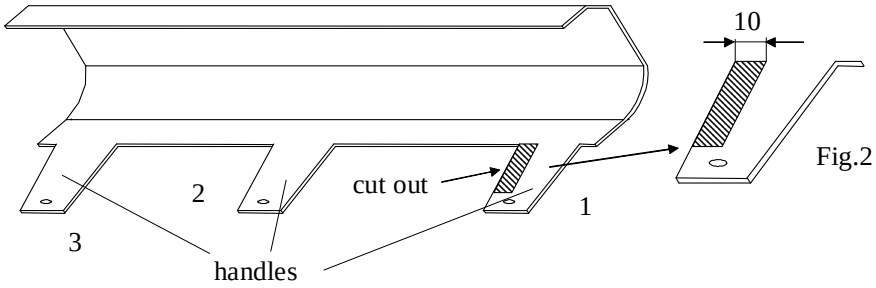

Fig.2

Torque settings for nuts and bolts (8,8):		
M6 - 11 Nm	**M8 -** 25 Nm	**M10 -** 50 Nm
M12 - 87 Nm	**M14 -** 138 Nm	**M16 -** 210 Nm

NOTE

After install the towbar you should get adequate note in registration book (at authorised service station). The car should be equipped with:

- Indicators
- Tow mirrors

Check all bolts and nuts after 1000 km of exploitation. The ball of towbar must be always kept clear and conserve with a grease.

Towbar accessories:

Pos. 1 Name: Main bar Quantity: 1 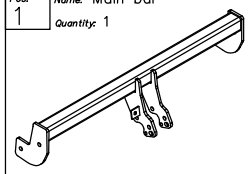	Pos. 6 Name: Right handle Quantity: 1 	Pos. 12 Name: Nut 8 B Quantity: 4 Dim. : M10 	Pos. 18 Name: Spring washer Quantity: 6 Dim. : ø 10,2 mm 
	Pos. 7 Name: Left handle Quantity: 1 	Pos. 13 Name: Nut 8 B Quantity: 3 Dim. : M8 	Pos. 19 Name: Spring washer Quantity: 2 Dim. : ø 8,2 mm 
Pos. 2 Name: Tow ball Quantity: 1 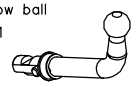	Pos. 8 Name: Bolt 8,8 B Quantity: 4 Dim. : M12x25mm 	Pos. 14 Name: Plain washer Quantity: 8 Dim. : ø 13 mm 	Pos. 20 Name: Spring Quantity: 1 
Pos. 3 Name: Socket plate Quantity: 1 	Pos. 9 Name: Bolt 8,8 B Quantity: 4 Dim. : M12x35mm 	Pos. 15 Name: Plain washer Quantity: 6 Dim. : ø 10,5 mm 	Pos. 21 Name: Bolt 8,8 B Quantity: 1 Dim. : M8x30mm 
Pos. 4 Name: Right bracket Quantity: 1 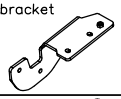	Pos. 10 Name: Bolt 8,8 B Quantity: 2 Dim. : M10x30mm 	Pos. 16 Name: Plain washer Quantity: 4 Dim. : ø 8,5 mm 	Pos. 22 Name: Ball cover Quantity: 1 
Pos. 5 Name: Left bracket Quantity: 1 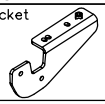	Pos. 11 Name: Nut 8 B Quantity: 4 Dim. : M12 	Pos. 17 Name: Spring washer Quantity: 8 Dim. : ø 12,2 mm 	Pos. 23 Name: Body of the automat Quantity: 1 
			Pos. 24 Name: Body plug Quantity: 1 

PPUH AUTO-HAK S.J.

Produkcja Zaczepów Kulowych
Henryk & Zbigniew Nejman
76-200 SŁUPSK ul. Słoneczna 16K
tel/fax (059) 8-414-414; 8-414-413
E-mail: office@autohak.com.pl
www.autohak.com.pl

Towing hitch (without electrical set)

Class: **A50-X** Cat. no. **F25A**
Designed for:
Manufacturer: **PEUGEOT**
Model: **307 SW**
Type: **ESTATE**
produced since 2001

Technical data:
D-value: **8,38 kN**
maximum trailer weight: **1500 kg**
maximum vertical cup load: **60 kg**

Approval number according to Directive 94/20/EC: e20*94/20*0823*00

Foreword

This towing hitch is designed according to rules of safety traffic regulations. The towing hitch is a safety component and can be install only by qualified personnel. Any alteration or conversion of the towing hitch is prohibited and would lead to cancellation of design certification. Remove insulating compound and underseal from vehicle (if present) in the areas of the matting surfaces of the towing hitch.
The vehicle manufacturer's specifications regarding trailer load and max. vertical cup mass are decisive for driving whereat values for the towing hitch cannot be exceeded.
D-value formula:

$$\frac{\text{Max trailer weight [kg]} \times \text{Max vehicle weight [kg]}}{\text{Max trailer weight [kg]} + \text{Max vehicle weight [kg]}} \times \frac{9{,}81}{1000} = D\ [\text{kN}]$$