FITTING INSTRUCTION

Clamp mark in acc. with		Cables joining
ISO	PN	
1	L	Left directional lights
2	+	Rear fog lights
3	31	Ground
4	R	Right directional lights
5	58R	Right side parking lights
6	54	Stoplights
7	58L	Left side parking lights

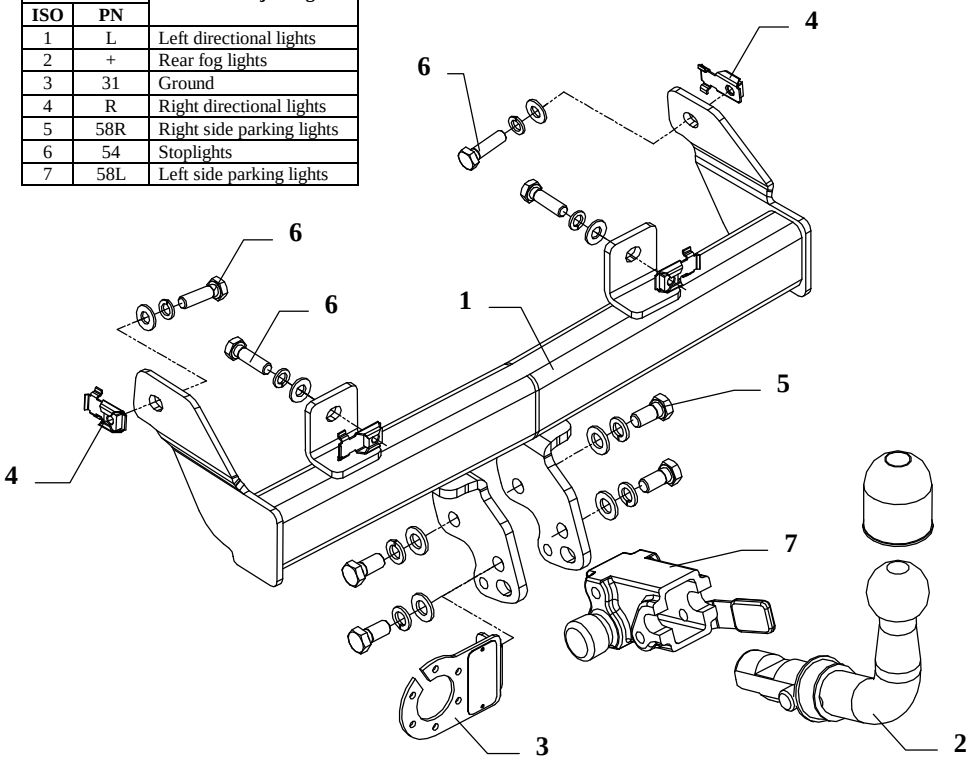

This towing hitch is designed to assembly in following cars: **PEUGEOT 106, 3/5 doors,** produced since 1991 till 04.1996, catalogue no. **F17A** and is prepared to tow trailers max total weight **1054 kg** and max vertical load **50 kg**.

From manufacturer

Thank you for buying our product. Their reliability has been confirmed in many tests. Reliability of towing hitch depends also on correct assembly and right operation. For this reasons we kindly ask to read carefully this instruction and apply to hints.

The towing hitch should be install in points described by a car producer.

The instruction of the assembly

1. Take out the spare wheel.
2. Into existing holes in chassis members put M10 „Caged Nut" (pos. 4).
3. To so prepared places apply the main bar of the towing hitch (pos. 1) and fix it using bolts M10x35mm (pos. 6) as shown at the drawing.
4. Tighten all bolts according to the torque shown in the table.
5. Fix body of the automat (pos. 7) and the socket plate (pos. 3) using bolts M12x25mm (pos. 5) from accessories. Place tow-ball (pos. 2) according to supplied instruction.
6. Connect electric wires of 7-poles socket according to the instruction of the car. (Recommend to make at authorized service station).
7. Complete paint layer damaged during installation.

Torque settings for nuts and bolts (8,8):	
M 8 - 25 Nm	**M 10 -** 55 Nm
M 12 - 85 Nm	**M 14 -** 135 Nm

NOTE

After install the towing hitch you should get adequate note in registration book (at authorised service station).The car should be equipped with:

- Indicators
- Tow mirrors

After 1000km check all bolts and nuts. The ball of towing hitch must be always kept clear and conserve with a grease.

Towing hitch accessories:

Pos. 1 Name: Main bar Quantity: 1 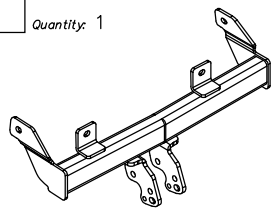	Pos. 4 Name: Caget nut Quantity: 4 Dim. : M10 	Pos. 9 Name: Plain washer Quantity: 4 Dim. : ø 10,5 mm 
	Pos. 5 Name: Bolt 8,8 B Quantity: 4 Dim. : M12x25mm 	Pos. 10 Name: Spring washer Quantity: 4 Dim. : ø 12,2 mm 
Pos. 2 Name: Tow ball Quantity: 1 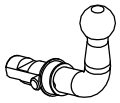	Pos. 6 Name: Bolt 8,8 B Quantity: 4 Dim. : M10x35mm 	Pos. 11 Name: Spring washer Quantity: 4 Dim. : ø 10,2 mm 
Pos. 3 Name: Socket plate Quantity: 1 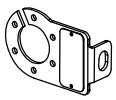	Pos. 7 Name: Body of the automat Quantity: 1 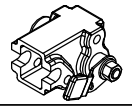	Pos. 12 Name: Ball cover Quantity: 1 
	Pos. 8 Name: Plain washer Quantity: 4 Dim. : ø 13 mm 	Pos. 13 Name: Body plug Quantity: 1 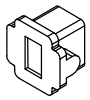

PPUH AUTO-HAK S.J.

Produkcja Haków Holowniczych
Henryk & Zbigniew Nejman
76-200 SŁUPSK ul. Słoneczna 16K
tel/fax (059) 8-414-414; 8-414-413
E-mail: office@autohak.com.pl
www. autohak.com.pl

Towing hitch (without electrical set)

Class: **A50-X** Cat. no. **F17A**
Designed for:
Manufacturer: **PEUGEOT**
Model: **106**
Type: **3/5 doors**
produced since 1991 till 04.1996

Technical data:
D-value: **6,6 kN**
maximum trailer weight: **1054 kg**
maximum vertical cup load: **50 kg**

Approval number according to Directive 94/20/EC: e20*94/20*0331*00

Foreword

This towing hitch is designed according to rules of safety traffic regulations. The towing hitch is a safety component and can be install only by qualified personnel. Any alteration or conversion of the towing hitch is prohibited and would lead to cancellation of design certification. Remove insulating compound and underseal from vehicle (if present) in the area of the matting surfaces of the towing hitch.
The vehicle manufacturer's specifications regarding trailer load and max. vertical cup load are decisive for driving, and values for the towing hitch cannot be exceeded.
D-value formula:

$$\frac{\text{Max trailer weight [kg]} \times \text{Max vehicle weight [kg]}}{\text{Max trailer weight [kg]} + \text{Max vehicle weight [kg]}} \times \frac{9{,}81}{1000} = D\ [\text{kN}]$$