FITTING INSTRUCTION

Clamp mark in acc. with		Cables joining
ISO	PN	
1	L	Left directional lights
2	+	Rear fog lights
3	31	Ground
4	R	Right directional lights
5	58R	Right side parking lights
6	54	Stoplights
7	58L	Left side parking lights

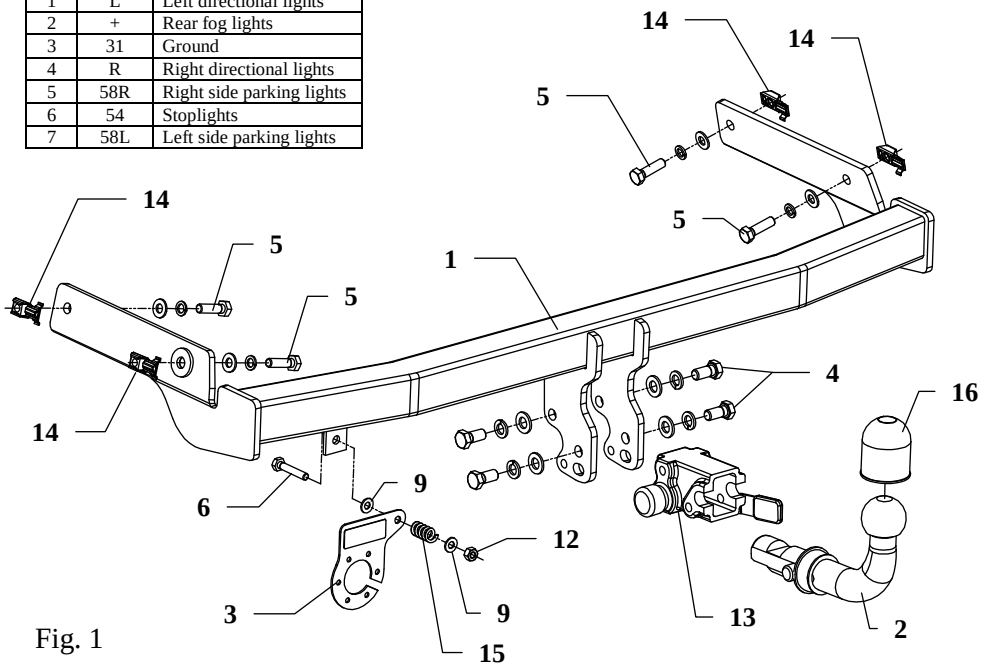

Fig. 1

This towbar is designed to assembly in following cars: **PEUGEOT 206**, produced since 1998 till 06.2003, catalogue number **F14A** and is prepared to tow trailers max total weight **1100 kg** and max vertical load **50 kg.**

From manufacturer

Thank you for buying our product. Their reliability has been confirmed in many tests. Reliability of towbar depends also on correct assembly and right operation. For this reasons we kindly ask to read carefully this instruction and apply to hints.

The towbar should be install in points described by a car producer.

The instruction of the assembly

1. Disassemble the rear bumper and take silencer down from the rubber supports.
2. Find the holes in the chassis on the left and right side then put two caget nuts (pos. 14) from the towbar accessories per each side.
3. Position the bar of towbar (pos. 1) to the chassis and fix with M10x35mm (pos. 5) bolts from the towbar accessories.
4. Cut the bumper according to fig. 2.
5. Reassemble the rear bumper.
6. Tighten all nuts and bolts according to the torque shown in the table.
7. Fix body of the automat (pos. 13) using bolts M12x25mm (pos. 4) from accessories. Place tow-ball (pos. 2) according to supplied instruction.
8. Fix the socket plate (pos. 3) as shown on the drawing.
9. Connect the electric wires according to the instructions of the car.
10. Complete the paint cover of towbar (during the mounting paint cover could be destroyed).

Fig. 2

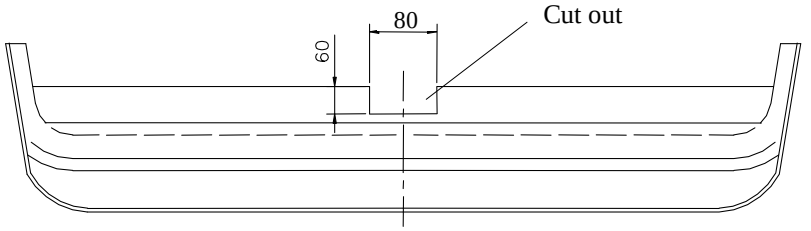

NOTE

After install the towbar you should get adequate note in registration book (at authorised service station).The car should be equipped with:

- Indicators
- Tow mirrors

After **1000km** of exploitation check all bolts and nuts. The ball of towbar must be always kept clear and conserve with a grease.

Towbar accessories:

Pos. 1 Main bar PCS.: 1 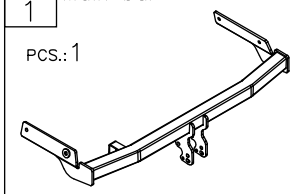	Pos. 6 Bolt 8,8 B M8x30mm PCS.: 1 	Pos. 12 Nut 8 B M8 PCS.: 1 
	Pos. 7 Plain washer ø13mm PCS.: 4 	Pos. 13 Body of the automat PCS.: 1 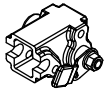
Pos. 2 Tow ball PCS.: 1 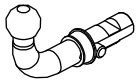	Pos. 8 Plain washer ø10,5mm PCS.: 4 	Pos. 14 Caget nut M10 PCS.: 4 
Pos. 3 Socket plate PCS.: 1 	Pos. 9 Plain washer ø8,5mm PCS.: 2 	Pos. 15 Spring PCS.: 1 
Pos. 4 Bolt 8,8 B M12x25mm PCS.: 4 	Pos. 10 Spring washer ø12,2mm PCS.: 4 	Pos. 16 Ball cover PCS.: 1 
Pos. 5 Bolt 8,8 B M10x35mm PCS.: 4 	Pos. 11 Spring washer ø10,2mm PCS.: 4 	Pos. 17 Body plug PCS.: 1 

PPUH AUTO-HAK Sp.J.

Produkcja Zaczepów Kulowych
Henryk & Zbigniew Nejman
76-200 SŁUPSK ul. Słoneczna 16K
tel/fax (059) 8-414-414; 8-414-413
E-mail: office@autohak.com.pl
www. autohak.com.pl

Towing hitch (without electrical set)

Class: **A50-X** Cat. no. **F14A**
Designed for:
Manufacturer: **PEUGEOT**
Model: **206**

produced since 1998 till 06.2003

Technical data:
D-value: **6,42 kN**
maximum trailer weight: **1100 kg**
maximum vertical cup load: **50 kg**

Approval number according to Directive 94/20/EC: e20*94/20*1086*00

Foreword

This towbar is designed according to rules of safety traffic regulations. The towing hitch is a safety component and must be installed only by qualified personnel. Any alteration or conversion to the towing hitch is prohibited and would lead to cancellation of design certification. Remove insulating compound and underseal from vehicle (if present) in the area of the matting surfaces of the towing hitch.
The vehicle manufacturer's specifications regarding trailer load and max. vertical cup load are decisive for driving, and values for the towing hitch must not be exceeded.
D-value formula:

$$\frac{\text{Max trailer weight [kg]} \times \text{Max vehicle weight [kg]}}{\text{Max trailer weight [kg]} + \text{Max vehicle weight [kg]}} \times \frac{9{,}81}{1000} = D\ [\text{kN}]$$