FITTING INSTRUCTION

Clamp mark in acc. with		Cables joining
ISO	PN	
1	L	Left directional lights
2	+	Rear fog lights
3	31	Ground
4	R	Right directional lights
5	58R	Right side parking lights
6	54	Stoplights
7	58L	Left side parking lights

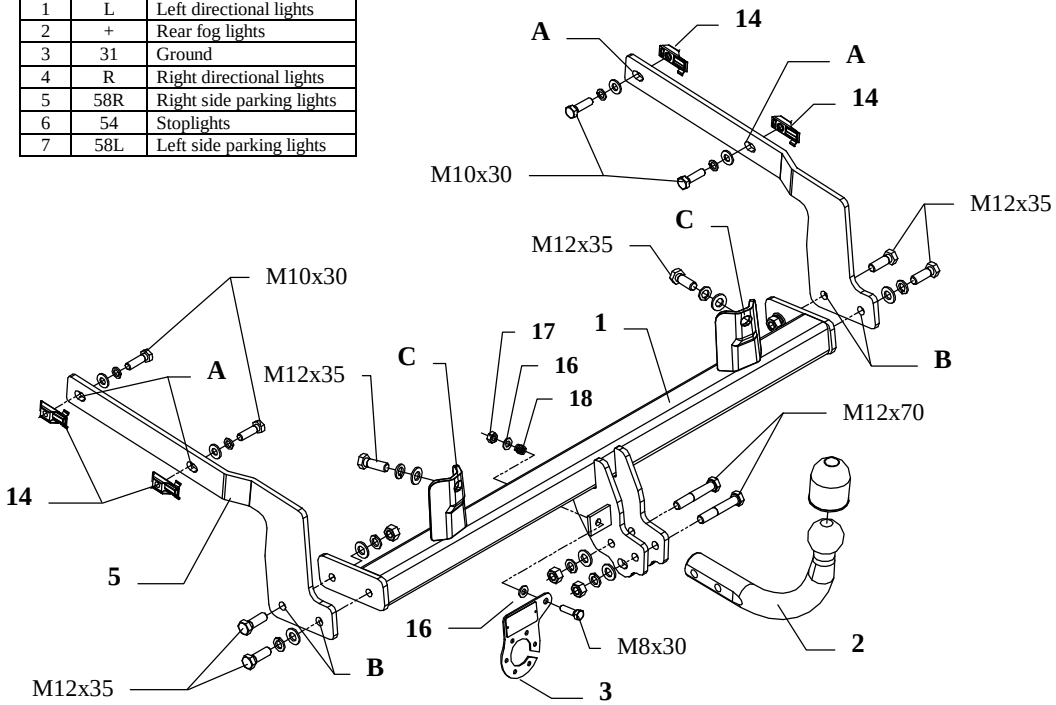

This towbar is designed to assembly in following cars: **PEUGEOT 406 D8, D9 ESTATE,** produced since 1996 till 02.1999 and since 03.1999 till 2004, catalogue no. **F08** and is prepared to tow trailers max total weight **1700 kg** and max vertical load **80 kg.**

From manufacturer

Thank you for buying our product. Their reliability has been confirmed in many tests. Reliability of towbar depends also on correct assembly and right operation. For this reasons we kindly ask to read carefully this instruction and apply to hints.

The towbar should be install in points described by a car producer.

The instruction of the assembly

1. Find holes in the chassis on the left and right side then put the special caged nuts M10 (pos. 14) from the towbar accessories
2. Fix the side supports (pos. 4 and 5) through holes (pos. A) with bolts M10x35mm (pos. 8).
3. Position the bar of towbar (pos. 1) between the supports and then fix with M12x35mm bolts (pos. 7) through holes (pos. B and C).
4. Fix the socket plate (pos. 3) as shown on the drawing.
5. Tighten all nuts and bolts according to the torque shown in the table.
6. Position the ball of towbar (pos. 2) and fix with M12x70mm bolts (pos. 6) from accessories.
7. Connect electric wires of 7-poles socket according to the instruction of the car. (Recommend to make at authorized service station).
8. Complete the paint cover of towbar (during the mounting paint cover could be destroyed).

Torque settings for nuts and bolts (8,8):

M 8	25 Nm	**M 10**	55 Nm
M 12	85 Nm	**M 14**	135Nm

NOTE

After install the towbar you should get adequate note in registration book (at authorised service station).The car should be equipped with:

- Indicators
- Tow mirrors

After 1000km of exploitation check all bolts and nuts. The ball of towbar must be always kept clear and conserve with a grease.

Towbar accessories:

Pos. 1 Name: Main bar Quantity: 1 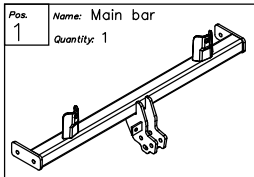	Pos. 5 Name: Left bracket Quantity: 1 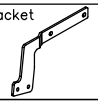	Pos. 10 Name: Plain washer Quantity: 8 Dim. : Ø 13 mm 	Pos. 15 Name: Bolt 8,8 B Quantity: 1 Dim. : M8x30mm 
	Pos. 6 Name: Bolt 8,8 B Quantity: 2 Dim. : M12x70mm 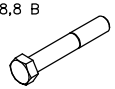	Pos. 11 Name: Plain washer Quantity: 4 Dim. : Ø 10,5 mm 	Pos. 16 Name: Plain washer Quantity: 2 Dim. : Ø 8,5 mm 
Pos. 2 Name: Tow ball Quantity: 1 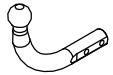	Pos. 7 Name: Bolt 8,8 B Quantity: 6 Dim. : M12x35mm 	Pos. 12 Name: Spring washer Quantity: 8 Dim. : Ø 12,2 mm 	Pos. 17 Name: Nut 8 B Quantity: 1 Dim. : M8 
Pos. 3 Name: Socket plate Quantity: 1 	Pos. 8 Name: Bolt 8,8 B Quantity: 4 Dim. : M10x35mm 	Pos. 13 Name: Spring washer Quantity: 4 Dim. : Ø 10,2 mm 	Pos. 18 Name: Spring Quantity: 1 
Pos. 4 Name: Right bracket Quantity: 1 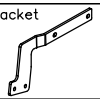	Pos. 9 Name: Nut 8 B Quantity: 4 Dim. : M12 	Pos. 14 Name: Caget nut Quantity: 4 Dim. : M10 	Pos. 19 Name: Ball cover Quantity: 1 

PPUH AUTO-HAK S.J.

Produkcja Zaczepów Kulowych
Henryk & Zbigniew Nejman
76-200 SŁUPSK ul. Słoneczna 16K
tel/fax (059) 8-414-414; 8-414-413
E-mail: office@autohak.com.pl
www. autohak.com.pl

Towing hitch (without electrical set)

Class: **A50-X** Cat. no. **F08**
Designed for:
Manufacturer: **PEUGEOT**
Model: **406**
Type: **D8, D9 ESTATE**
produced since 1996 till 02.1999
and since 03.1999 till 2004

Technical data:
D-value: **9,3 kN**
maximum trailer weight: **1700 kg**
maximum vertical cup load: **80 kg**

Approval number acc. to regulations EKG/ONZ 55.01: E20-55R-01 0902

Foreword

This towbar is designed according to rules of safety traffic regulations. The towing hitch is a safety component and can be install only by qualified personnel. Any alteration or conversion of the towing hitch is prohibited and would lead to cancellation of design certification. Remove insulating compound and underseal from vehicle (if present) in the area of the matting surfaces of the towing hitch.
The vehicle manufacturer's specifications regarding trailer load and max. vertical cup load are decisive for driving whereat values for the towing hitch cannot be exceeded.
D-value formula:

$$\frac{\text{Max trailer weight [kg]} \times \text{Max vehicle weight [kg]}}{\text{Max trailer weight [kg]} + \text{Max vehicle weight [kg]}} \times \frac{9{,}81}{1000} = D\ [\text{kN}]$$