FITTING INSTRUCTION

Clamp mark in acc. with		Cables joining
ISO	PN	
1	L	Left directional lights
2	+	Rear fog lights
3	31	Ground
4	R	Right directional lights
5	58R	Right side parking lights
6	54	Stoplights
7	58L	Left side parking lights

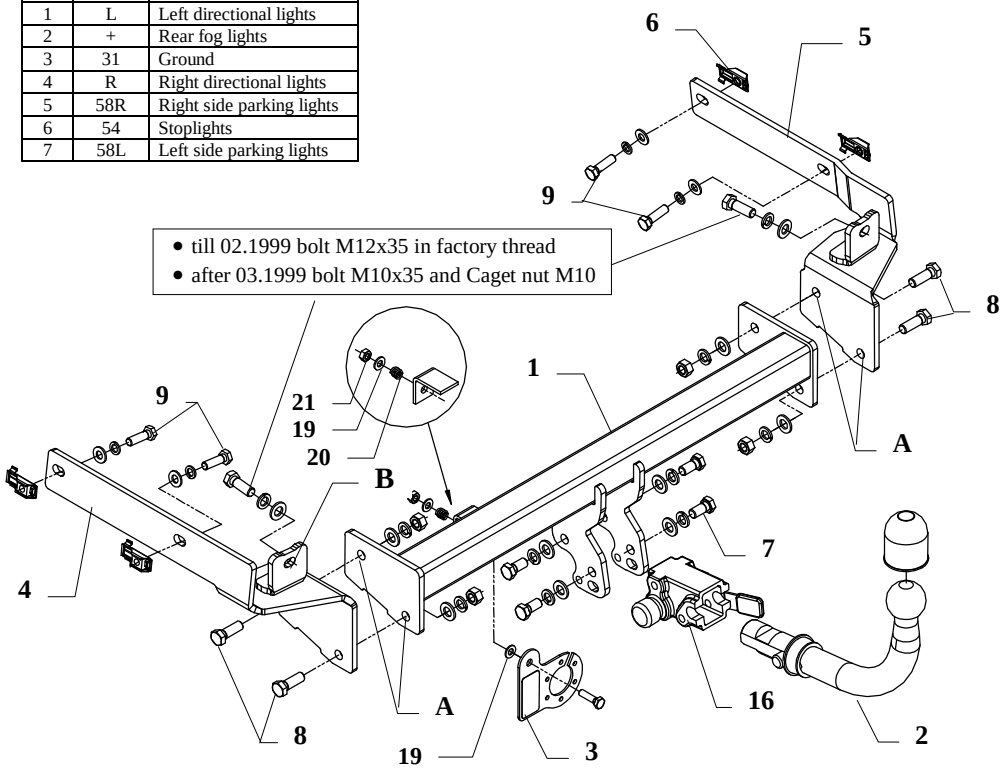

This towbar is designed to assembly in following cars: **PEUGEOT 406, 4 doors,** produced since 1995 till 02.1999 and produced since 03.1999 till 2004, catalogue no. **F06A** and is prepared to tow trailers max total weight **1700 kg** and max vertical load **80 kg**.

From manufacturer

Thank you for buying our product. Their reliability has been confirmed in many tests. Reliability of towbar depends also on correct assembly and right operation. For this reasons we kindly ask to read carefully this instruction and apply to hints.

The towbar should be install in points described by a car producer.

The instruction of the assembly

1. Put caget nuts M10 into existing holes in chassis members on the left and right side of the car.
   NOTE! In models produced after 03.1999 caget nuts put also in factory prapared holes (pos. B) in rear piece of the car.
2. Into prepared places fix side brackets (pos. 4 and 5, see drawing) with bolts from accessories.
3. Between brackets put the main bar of the towbar (pos. 1) and through holes (pos. A and B) fix it using bolts M12x35mm (pos. 8).
4. Assemble the bumper.
5. Fix body of the automat (pos. 16) using bolts M12x25mm (pos. 7) from accessories. Place tow-ball (pos. 2) according to supplied instruction.
6. Fix the socket plate (pos. 3) as shown on the drawing.
7. Tighten all bolts according to the torque shown in the table.
8. Connect electric wires of 7-poles socket according to the instruction of the car. (Recommend to make at authorized service station).
9. Complete paint layer damaged during installation.

Torque settings for nuts and bolts (8,8):		
M6 - 11 Nm	M8 - 25 Nm	M10 - 50 Nm
M12 - 87 Nm	M14 - 138 Nm	M16 - 210 Nm

NOTE

After install the towbar you should get adequate note in registration book (at authorised service station). The car should be equipped with:

- Indicators
- Tow mirrors

After 1000km of exploitation check all bolts and nuts. The ball of towbar must be always kept clear and conserve with a grease.

Towbar accessories:

Pos. 1 Name: Main bar Quantity: 1 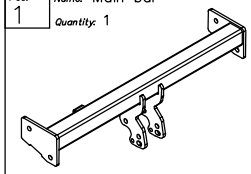	Pos. 6 Name: "Caget nut" Quantity: 6 Dim. : M10 (19x50mm) 	Pos. 12 Name: Plain washer Quantity: 6 Dim. : Ø 10,5 mm 	Pos. 18 Name: Bolt 8,8 B Quantity: 1 Dim. : M8x30mm 
	Pos. 7 Name: Bolt 8,8 B Quantity: 4 Dim. : M12x25mm 	Pos. 13 Name: Spring washer Quantity: 10 Dim. : Ø 12,2 mm 	Pos. 19 Name: Plain washer Quantity: 2 Dim. : Ø 8,5 mm 
Pos. 2 Name: Tow ball Quantity: 1 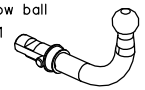	Pos. 8 Name: Bolt 8,8 B Quantity: 6 Dim. : M12x35mm 	Pos. 14 Name: Spring washer Quantity: 6 Dim. : Ø 10,2 mm 	Pos. 20 Name: Spring Quantity: 1 
Pos. 3 Name: Socket plate Quantity: 1 	Pos. 9 Name: Bolt 8,8 B Quantity: 6 Dim. : M10x35mm 	Pos. 15 Name: Ball cover Quantity: 1 	Pos. 21 Name: Nut 8 B Quantity: 1 Dim. : M8 
Pos. 4 Name: Left bracket Quantity: 1 Dim. : 434x177x115mm 	Pos. 10 Name: Nut 8 B Quantity: 4 Dim. : M12 	Pos. 16 Name: Body of the automat Quantity: 1 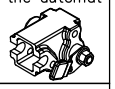	
Pos. 5 Name: Right bracket Quantity: 1 Dim. : 434x177x115mm 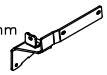	Pos. 11 Name: Plain washer Quantity: 10 Dim. : Ø 13 mm 	Pos. 17 Name: Body plug Quantity: 1 	

PPUH AUTO-HAK Sp. J.

Produkcja Zaczepów Kulowych
Henryk & Zbigniew Nejman
76-200 SŁUPSK ul. Słoneczna 16K
tel/fax (059) 8-414-414; 8-414-413
E-mail: office@autohak.com.pl
www.autohak.com.pl

Towing hitch (without electrical set)

Class: A50-X Cat. no. **F06A**
Designed for:
Manufacturer: **PEUGEOT**
Model: **406**
Type: **4 doors**
produced since 1995 till 02.1999
and produced since 03.1999 till 2004

Technical data:
D-value: **9,16 kN**
maximum trailer weight: **1700 kg**
maximum vertical cup load: **80 kg**

Approval number according to Directive 94/20/EC: e20*94/20*1048*00

Foreword

This towing hitch is designed according to rules of safety traffic regulations. The towing hitch is a safety component and can be install only by qualified personnel. Any alteration or conversion of the towing hitch is prohibited and would lead to cancellation of design certification. Remove insulating compound and underseal from vehicle (if present) in the areas of the matting surfaces of the towing hitch.
The vehicle manufacturer's specifications regarding trailer load and max. vertical cup mass are decisive for driving whereat values for the towing hitch cannot be exceeded.
D-value formula:

$$\frac{\text{Max trailer weight [kg]} \times \text{Max vehicle weight [kg]}}{\text{Max trailer weight [kg]} + \text{Max vehicle weight [kg]}} \times \frac{9{,}81}{1000} = \mathbf{D\ [kN]}$$