FITTING INSTRUCTION

Clamp mark in acc. with		Cables joining
ISO	PN	
1	L	Left directional lights
2	+	Rear fog lights
3	31	Ground
4	R	Right directional lights
5	58R	Right side parking lights
6	54	Stoplights
7	58L	Left side parking lights

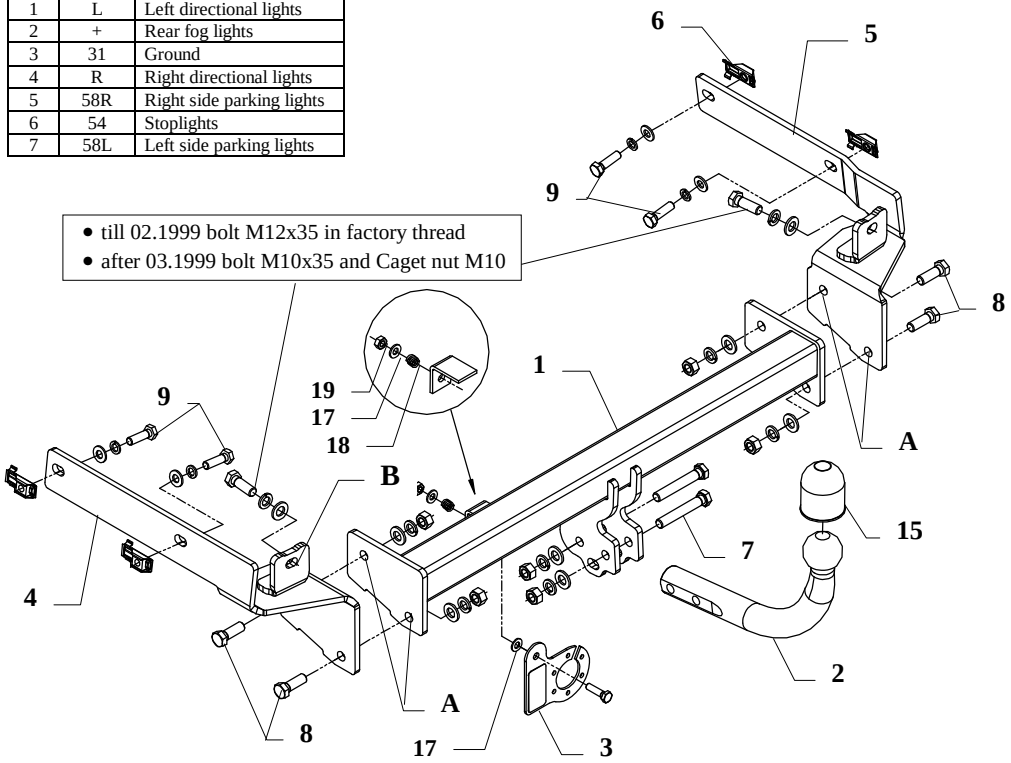

This towbar is designed to assembly in following cars: **PEUGEOT 406, 4 doors,** produced since 1995 till 02.1999 and produced since 03.1999 till 2004, catalogue no. **F06** and is prepared to tow trailers max total weight **1700 kg** and max vertical load **80 kg**.

From manufacturer

Thank you for buying our product. Their reliability has been confirmed in many tests. Reliability of towbar depends also on correct assembly and right operation. For this reasons we kindly ask to read carefully this instruction and apply to hints.

The towbar should be install in points described by a car producer.

The instruction of the assembly

1. Put caget nuts M10 into existing holes in chassis members on the left and right side of the car.
   NOTE! In models produced after 03.1999 caget nuts put also in factory prapared holes (pos. B) in rear piece of the car.
2. Into prepared places fix side brackets (pos. 4 and 5, see drawing) with bolts from accessories.
3. Between brackets put main bar of the towbar (pos. 1) and through holes (pos. A and B) fix it with bolts M12x35mm (pos. 8).
4. Assemble the bumper.
5. Fix tow-ball (pos. 2) using bolts M12x75mm (pos. 7) from accessories.
6. Fix the socket plate (pos. 3) as shown on the drawing.
7. Tighten all bolts according to the torque shown in the table.
8. Connect electric wires of 7-poles socket according to the instruction of the car. (Recommend to make at authorized service station).
9. Complete paint layer damaged during installation.

Torque settings for nuts and bolts (8,8):	
M 8 - 25 Nm	**M 10** - 55 Nm
M 12 - 85 Nm	**M 14** - 135 Nm

NOTE

After install the towbar you should get adequate note in registration book (at authorised service station). The car should be equipped with:

- Indicators
- Tow mirrors

After 1000km check all bolts and nuts. The ball of towbar must be always kept clear and conserve with a grease.

Towbar accessories:

Pos. 1 Name: Main bar Quantity: 1 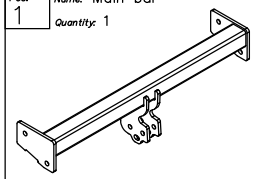	Pos. 5 Name: Right bracket Quantity: 1 Dim. : 434x177x115mm 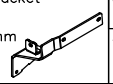	Pos. 10 Name: Nut 8 B Quantity: 6 Dim. : M12 	Pos. 15 Name: Ball cover Quantity: 1 
	Pos. 6 Name: "Caget nut" Quantity: 6 Dim. : M10 (19x50mm) 	Pos. 11 Name: Plain washer Quantity: 8 Dim. : Ø 13 mm 	Pos. 16 Name: Bolt 8,8 B Quantity: 1 Dim. : M8x30mm 
Pos. 2 Name: Tow ball Quantity: 1 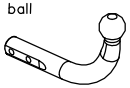	Pos. 7 Name: Bolt 8,8 B Quantity: 2 Dim. : M12x75mm 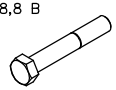	Pos. 12 Name: Plain washer Quantity: 6 Dim. : Ø 10,5 mm 	Pos. 17 Name: Plain washer Quantity: 2 Dim. : Ø 8,5 mm 
Pos. 3 Name: Socket plate Quantity: 1 	Pos. 8 Name: Bolt 8,8 B Quantity: 6 Dim. : M12x35mm 	Pos. 13 Name: Spring washer Quantity: 8 Dim. : Ø 12,2 mm 	Pos. 18 Name: Spring Quantity: 1 
Pos. 4 Name: Left bracket Quantity: 1 Dim. : 434x177x115mm 	Pos. 9 Name: Bolt 8,8 B Quantity: 6 Dim. : M10x35mm 	Pos. 14 Name: Spring washer Quantity: 6 Dim. : Ø 10,2 mm 	Pos. 19 Name: Nut 8 B Quantity: 1 Dim. : M8 

PPUH AUTO-HAK S. J.

Produkcja Haków Holowniczych
Henryk & Zbigniew Nejman
76-200 SŁUPSK ul. Słoneczna 16K
tel/fax (059) 8-414-414; 8-414-413
E-mail: office@autohak.com.pl
www.autohak.com.pl

Towing hitch (without electrical set)

Class: A50-X Cat. no. **F06**
Designed for:
Manufacturer: **PEUGEOT**
Model: **406**
Type: **4 doors**
produced since 1995 till 02.1999
and produced since 03.1999 till 2004

Technical data:
D-value: **9,16 kN**
maximum trailer weight: **1700 kg**
maximum vertical cup load: **80 kg**

Approval number acc. to regulations EKG/ONZ 55.01: E20-55R-01 0907

Foreword

This towbar is designed according to rules of safety traffic regulations. The towing hitch is a safety component and must be installed only by qualified personnel. Any alteration or conversion to the towinh hitch is prohibited and would lead to cancellation of design certification. Remove insulating compound and underseal from vehicle (if present) in the area of the matting surfaces of the towing hitch.
The vehicle manufacturer's specifications regarding trailer load and max. vertical cup load are decisive for driving, and values for the towing hitch cannot be exceeded.
D-value formula:

$$\frac{\text{Max trailer weight [kg]} \times \text{Max vehicle weight [kg]}}{\text{Max trailer weight [kg]} + \text{Max vehicle weight [kg]}} \times \frac{9{,}81}{1000} = D\ [\text{kN}]$$