FITTING INSTRUCTION

Clamp mark in acc. with		Cables joining
ISO	PN	
1	L	Left directional lights
2	+	Rear fog lights
3	31	Ground
4	R	Right directional lights
5	58R	Right side parking lights
6	54	Stoplights
7	58L	Left side parking lights

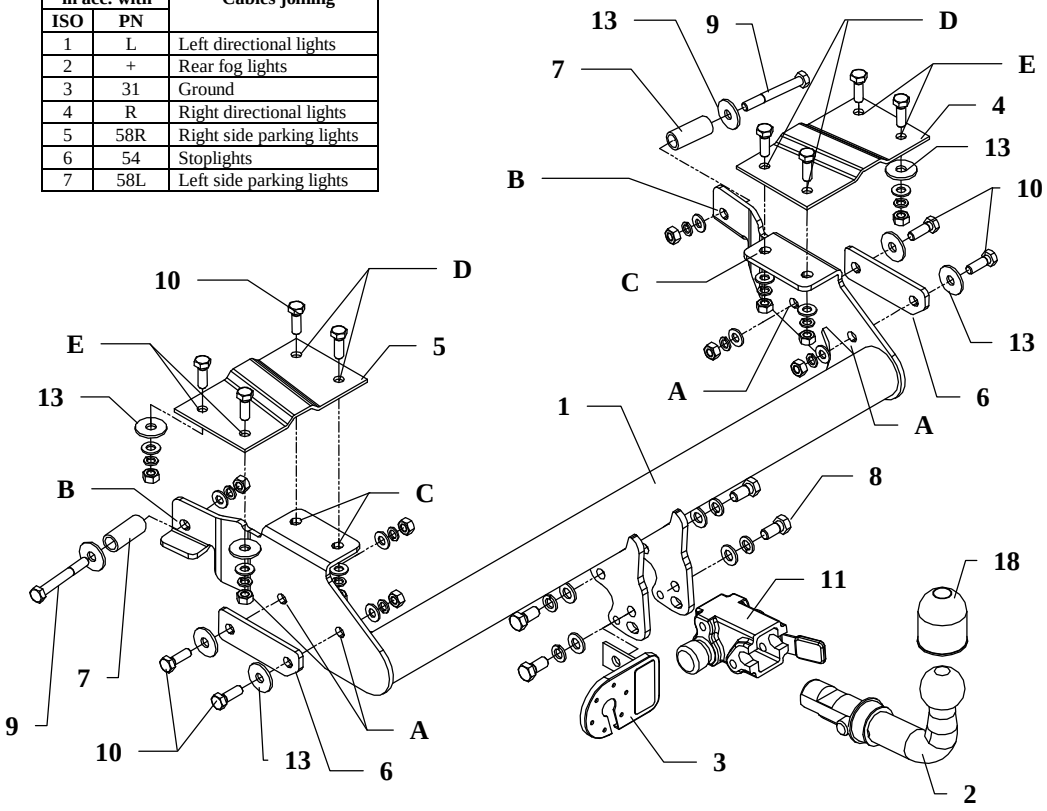

The towbar can be used in the following car:
PEUGEOT 405, 4 doors, produced since 1987 till 1995, catalogue number **F05A** and is prepared to tow trailers max total weight **1200 kg** and max vertical load **65 kg**.

From manufacturer

Thank you for buying our product. Their reliability has been confirmed in many tests. Reliability of towbar depends also on correct assembly and right operation. For this reasons we kindly ask to read carefully this instruction and apply to hints.

The towbar should be install in points described by a car producer.

The instruction of the assembly

1. For install the towbar, take out the spare wheel and let down the fix basket.
2. Apply the bar (pos. 1) to the chassis of the car and through the holes (pos. A) placed in the left and right side, and across the existing holes in the towing grip designed by the manufacturer and plates (pos. 6) twist bolts M10x30mm (pos. 10).
3. Across the holes in the towbar (pos. B) drill holes to ø10,5mm in the chassis. Use an angular drilling machine, for drill holes to ø21mm, from the outside of the chassis. In each hole put the distance sleeves (pos. 7) from the equipment. Use the washers pos. 13. From the outside of the chassis twist with screws M10x80mm (pos. 9) - look at the drawing.
4. From under the car and by the holes pos. C drill trough using bit ø10,5mm.
5. Twist with bolts M10x30mm through holes of the boot (pos. D) and cover plates (pos. 4 and 5) and holes pos. C. Use the added washers.
6. Twist with screws M10x30mm through holes of the boot (pos. E) and cover plates (pos. 4 and 5). Drill trough the holes to ø10,5 mm. Use the washers.
7. Screw tight all bolts according to the torque shown in the table.
8. Fix body of the automat (pos. 11) and the socket plate (pos. 3) using bolts M12x25mm (pos. 8) from equipment. Place tow-ball (pos. 2) according to supplied instruction.
9. Connect the kit wires to the electric installation, in accordance of the instructions of the car.
10. Complete the possible decreases of the paint cover of towbar, originate during the mounting.

Torque settings for nuts and bolts (8,8):		
M6 - 11 Nm	**M8 -** 25 Nm	**M10 -** 50 Nm
M12 - 87 Nm	**M14 -** 138 Nm	**M16 -** 210 Nm

NOTE

After install the towbar you should get adequate note in registration book (at authorised service station).The car should be equipped with:

- Indicators
- Tow mirrors

After 1000km of exploitation check all bolts and nuts. The ball of towbar must be always kept clear and conserve with a grease.

Towbar equipment:

Pos. 1 Name: Main bar Quantity: 1 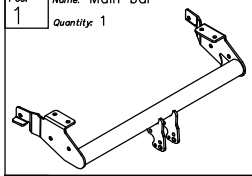	Pos. 5 Name: Left fish–plate Quantity: 1 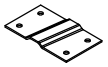	Pos. 10 Name: Bolt 8,8 B Quantity: 12 Dim. : M10x30mm 	Pos. 15 Name: Plain washer Quantity: 14 Dim. : ø 10,5 mm 
	Pos. 6 Name: Plate Quantity: 2 	Pos. 11 Name: Korpus automatu Quantity: 1 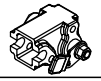	Pos. 16 Name: Spring washer Quantity: 4 Dim. : ø 12,2 mm 
Pos. 2 Name: Tow ball Quantity: 1 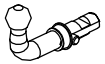	Pos. 7 Name: Distance sleeve Quantity: 2 Dim. : ø21,3xø2,65mm L=49mm 	Pos. 12 Name: Nut 8 B Quantity: 14 Dim. : M10 	Pos. 17 Name: Spring washer Quantity: 14 Dim. : ø 10,2 mm 
Pos. 3 Name: Socket plate Quantity: 1 	Pos. 8 Name: Bolt 8,8 B Quantity: 4 Dim. : M12x25mm 	Pos. 13 Name: Washer Quantity: 10 Dim. : ø35xø12x3mm 	Pos. 18 Name: Ball cover Quantity: 1 
Pos. 4 Name: Right fish–plate Quantity: 1 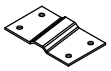	Pos. 9 Name: Bolt 8,8 B Quantity: 2 Dim. : M10x80mm 	Pos. 14 Name: Plain washer Quantity: 4 Dim. : ø 13 mm 	Pos. 19 Name: Body plug Quantity: 1 

PPUH AUTO-HAK S.J.

Produkcja Zaczepów Kulowych
Henryk & Zbigniew Nejman
76-200 SŁUPSK ul. Słoneczna 16K
tel/fax (059) 8-414-414; 8-414-413
E-mail: office@autohak.com.pl
www.autohak.com.pl

Towing hitch (without electrical set)

Class: **A50-X** Cat. no. **F05A**
Designed for:
Manufacturer: **PEUGEOT**
Model: **405**
Type: **4 doors**
produced since 1987 till 1995

Technical data:
D-value: **6,83 kN**
maximum trailer weight: **1200 kg**
maximum vertical cup load: **65 kg**

Approval number according to Directive 94/20/EC: e20*94/20*1090*00

Foreword

This towbar is designed according to rules of safety traffic regulations. The towing hitch is a safety component and can be install only by qualified personnel. Any alteration or conversion of the towing hitch is prohibited and would lead to cancellation of design certification. Remove insulating compound and underseal from vehicle (if present) in the area of the matting surfaces of the towing hitch.
The vehicle manufacturer's specifications regarding trailer load and max. vertical cup load are decisive for driving, and values for the towing hitch cannot be exceeded.
D-value formula:

$$\frac{\text{Max trailer weight [kg]} \times \text{Max vehicle weight [kg]}}{\text{Max trailer weight [kg]} + \text{Max vehicle weight [kg]}} \times \frac{9{,}81}{1000} = D\ [\text{kN}]$$