FITTING INSTRUCTION

Clamp mark in acc. with		Cables joining
ISO	PN	
1	L	Left directional lights
2	+	Rear fog lights
3	31	Ground
4	R	Right directional lights
5	58R	Right side parking lights
6	54	Stoplights
7	58L	Left side parking lights

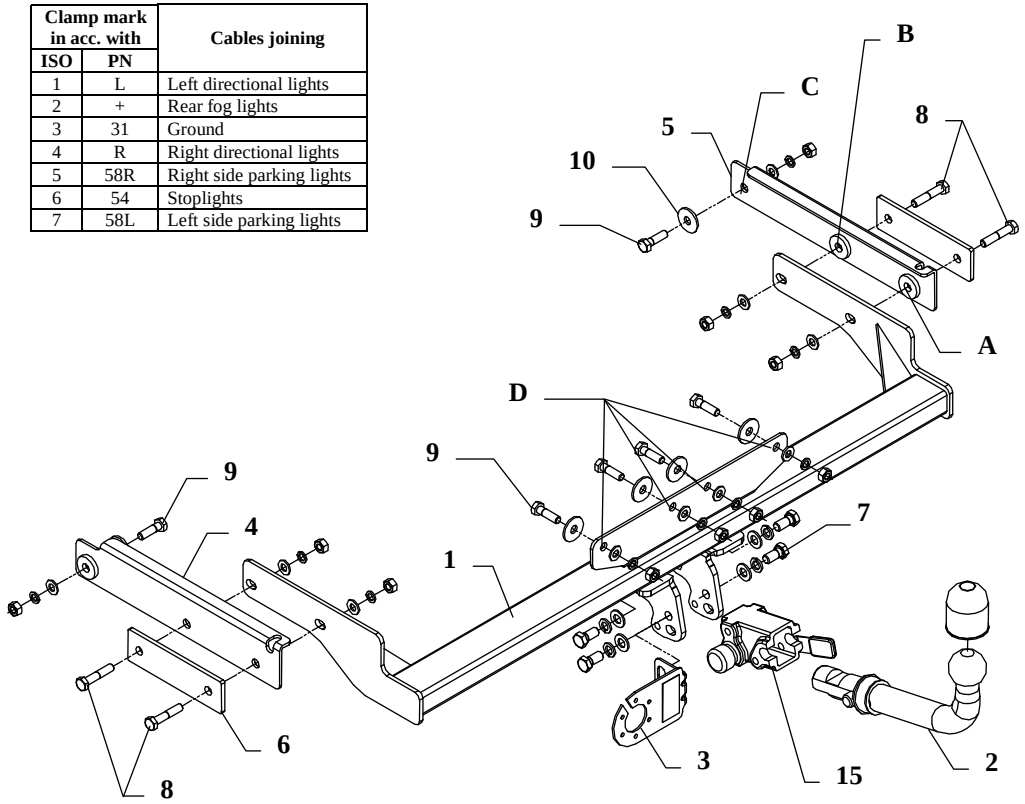

Fig. 1

This towbar is designed to assembly in following cars: **PEUGEOT 309,** produced since 1986 till 1993, catalogue no. **F04A** and is prepared to tow trailers max total weight **1100 kg** and max vertical load **50 kg**.

From manufacturer

Thank you for buying our product. Their reliability has been confirmed in many tests. Reliability of towbar depends also on correct assembly and right operation. For this reasons we kindly ask to read carefully this instruction and apply to hints.

The towbar should be install in points described by a car producer.

The instruction of the assembly

1. Disassemble the rear bumper.
2. Unrivet from body handles of the bumper (3 pcs.) and unscrew thermal shield of last muffler.
3. On the left and right side put to chassis members brackets (pos. 4 and 5) in this way so elongated holes tally with plastic pin protruding from floor and next through holes (pos. A, B, C) drill holes ø11mm.
4. Bracket (pos. 5) screw through hole (pos. C) using washers (pos. 10) and bolts M10x30mm (pos.9).
5. Put main bar of towbar (pos. 1) to mounted brackets (pos. 4 and 5), through holes (pos. A and B), washers and plates (pos. 6) screw with chassis member using bolts M10x50mm (pos. 8) from towbar accessories.
6. Through holes (pos. D) drill holes ø11mm and next screw with bolts M10x30mm – pos. 9 (use washers ø35xø12x3mm – pos. 10).
7. Fix body of the automat (pos. 15) and the socket plate (pos. 3) using bolts M12x25mm (pos. 7) from accessories. Place tow-ball (pos. 2) according to supplied instruction.
8. Tighten all bolts according to the torque shown in the table.
9. In central part of the bumper cut out fragment 70x80mm as shown in the fig. 2.

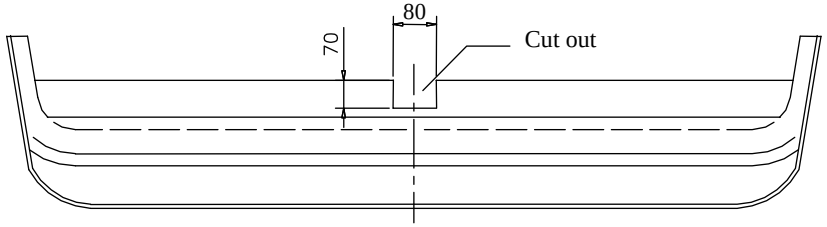

Fig. 2

10. Assemble thermal shield and the bumper.
11. In early unrivets handles drill upper hole using bit ø11mm and on this way prepared handle fix to the towbar through holes (pos. A) and next screw with bumper as originally.
12. Connect electric wires of 7-poles socket according to the instruction of the car. (Recommend to make at authorized service station).
13. Complete paint layer damaged during installation.

Torque settings for nuts and bolts (8,8):		
M6 - 11 Nm	**M8 -** 25 Nm	**M10 -** 50 Nm
M12 - 87 Nm	**M14 -** 138 Nm	**M16 -** 210 Nm

NOTE

After install the towbar you should get adequate note in registration book (at authorised service station).The car should be equipped with:

- Indicators
- Tow mirrors

After 1000km of exploitation check all bolts and nuts. The ball of towbar must be always kept clear and conserve with a grease.

Towbar accessories:

Pos. 1 Name: Main bar Quantity: 1 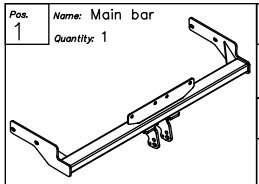	Pos. 5 Name: Right fish–plate Quantity: 1 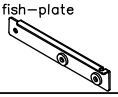	Pos. 10 Name: Washer Quantity: 6 Dim. : ø35xø12x3mm 	Pos. 15 Name: Body of the automat Quantity: 1 
	Pos. 6 Name: Plate Quantity: 2 	Pos. 11 Name: Plain washer Quantity: 4 Dim. : ø 13 mm 	Pos. 16 Name: Nut 8 B Quantity: 10 Dim. : M10 
Pos. 2 Name: Tow ball Quantity: 1 	Pos. 7 Name: Bolt 8,8 B Quantity: 4 Dim. : M12x25mm 	Pos. 12 Name: Plain washer Quantity: 10 Dim. : ø 10,5 mm 	Pos. 17 Name: Ball cover Quantity: 1 
Pos. 3 Name: Socket plate Quantity: 1 	Pos. 8 Name: Bolt 8,8 B Quantity: 4 Dim. : M10x50mm 	Pos. 13 Name: Spring washer Quantity: 4 Dim. : ø 12,2 mm 	Pos. 18 Name: Body plug Quantity: 1 
Pos. 4 Name: Left fish–plate Quantity: 1 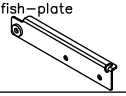	Pos. 9 Name: Bolt 8,8 B Quantity: 6 Dim. : M10x30mm 	Pos. 14 Name: Spring washer Quantity: 10 Dim. : ø 10,2 mm 	

PPUH AUTO-HAK S.J.

Produkcja Zaczepów Kulowych
Henryk & Zbigniew Nejman
76-200 SŁUPSK ul. Słoneczna 16K
tel/fax (059) 8-414-414; 8-414-413
E-mail: office@autohak.com.pl
www. autohak.com.pl

Towing hitch (without electrical set)

Class: **A50-X** Cat. no. **F04A**
Designed for:
Manufacturer: **PEUGEOT**
Model: **309**
produced since 1986 till 1993

Technical data:
D-value: **7,22 kN**
maximum trailer weight: **1100 kg**
maximum vertical cup load: **50 kg**

Approval number according to Directive 94/20/EC: e20*94/20*1351*00

Foreword

This towbar is designed according to rules of safety traffic regulations. The towing hitch is a safety component and can be install only by qualified personnel. Any alteration or conversion of the towing hitch is prohibited and would lead to cancellation of design certification. Remove insulating compound and underseal from vehicle (if present) in the area of the matting surfaces of the towing hitch.
The vehicle manufacturer's specifications regarding trailer load and max. vertical cup load are decisive for driving, and values for the towing hitch cannot be exceeded.
D-value formula:

$$\frac{\text{Max trailer weight [kg]} \times \text{Max vehicle weight [kg]}}{\text{Max trailer weight [kg]} + \text{Max vehicle weight [kg]}} \times \frac{9{,}81}{1000} = D\ [\text{kN}]$$