FITTING INSTRUCTION

Clamp mark in acc. with		Cables joining
ISO	PN	
1	L	Left directional lights
2	+	Rear fog lights
3	31	Ground
4	R	Right directional lights
5	58R	Right side parking lights
6	54	Stoplights
7	58L	Left side parking lights

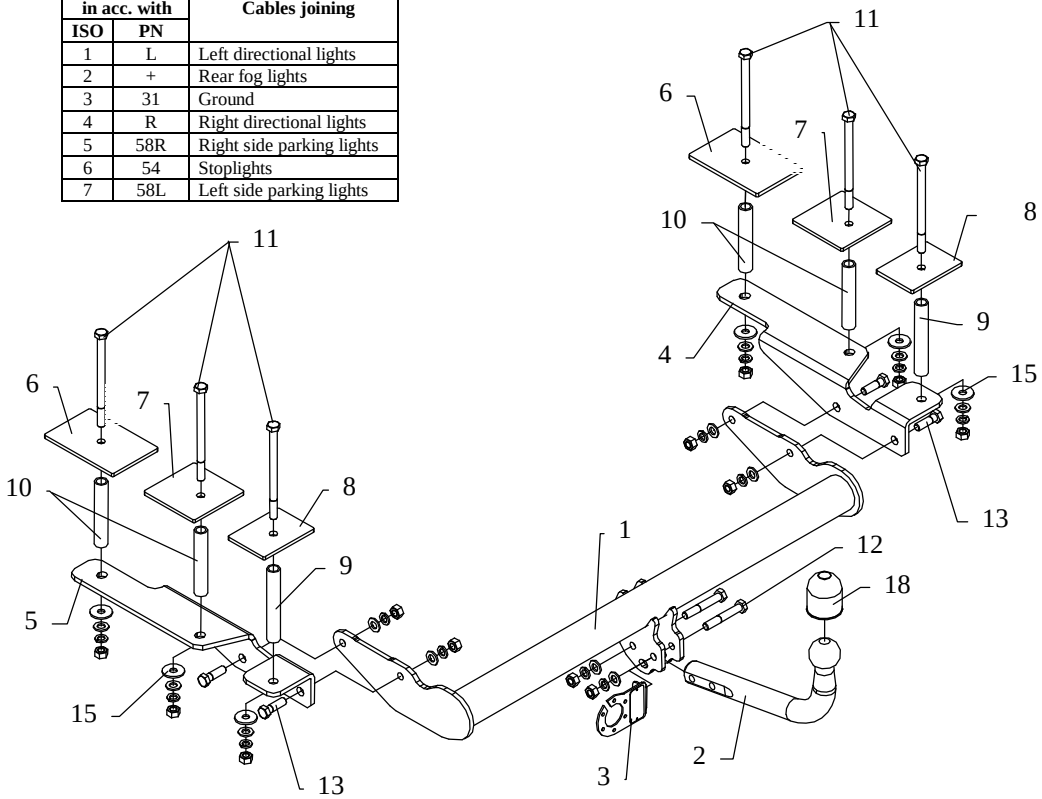

This towing hitch is designed to assembly in following car: **OPEL VECTRA ESTATE** produced since 2003 till 2008, catalogue number **E47** and is prepared to tow trailers max total weight **2000 kg** and max vertical load **85 kg.**

From manufacturer

Thank you for buying our product. Their reliability has been confirmed in many tests. Reliability of towing hitch depends also on correct assembly and correct exploitation. For this reasons we kindly ask to read carefully this instruction and apply to hints.

The towing hitch should be install in points described by a car producer.

The instruction of the assembly

1. Disassemble rear cover panels from the trunk.
2. On the left and right side inside bumper find per three marked points and drill it using bit ø21mm (not through!).
3. To made holes put distance sleeves (pos. 9 and 10) and put fish-plates (pos. 6, 7 and 8). Next put bolts M12x170mm (pos. 11).
4. Get lower the muffler from the last handle and disassemble the thermal shield.
5. On protruding bolts (pos. 11) put elements (pos. 4 and 5) and fix loosely using big washers (pos. 15) – see figure.
6. Between elements pos. 4 and 5 put main bar of the towing hitch (pos. 1) and fix it using bolts M12x40mm (pos. 13).
7. Fix tight all bolts according to the torque shown in the table.
8. Fix tow-ball (pos. 2) and socket plate (pos. 3) using bolts M12x75mm (pos. 12) from accessories.
9. Reassemble the thermal shield and the muffler.
10. Reassemble side, cover panels in the trunk.
11. Connect electric wires according to the instruction of the car. (Recommend to make at authorized service station)
12. Complete the paint coating damaged during installation.

Torque settings for nuts and bolts (8,8):

M 8	25 Nm	**M 10**	55 Nm
M 12	85 Nm	**M 14**	135 Nm

NOTE

After install the towing hitch you should get adequate note in registration book (at authorised service station).The car should be equipped with:

- Indicators
- Tow mirrors

After 1000km of exploitation check all bolts and nuts. The ball of towing hitch must be always kept clear and conserve with a grease.

Towing hitch accessories:

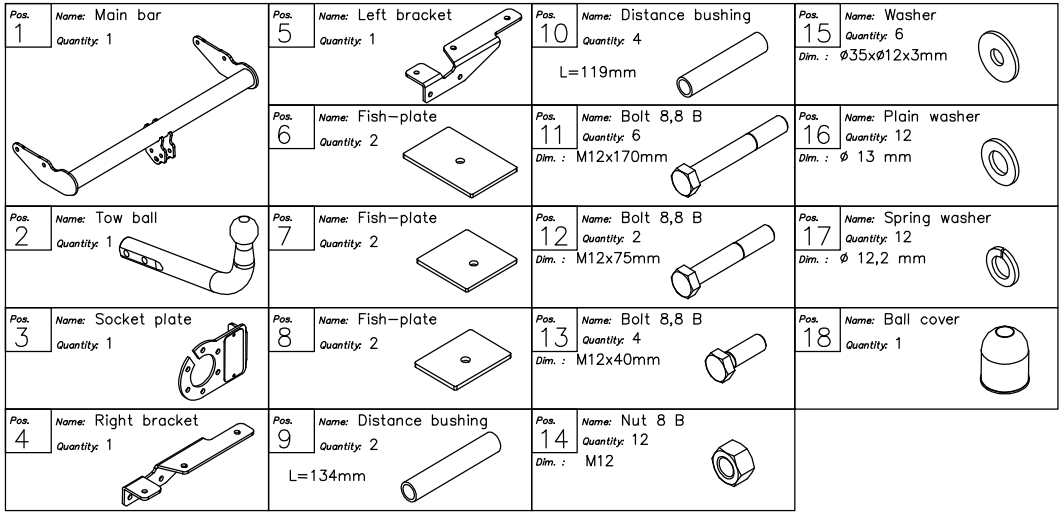

PPUH AUTO-HAK S.J.

Produkcja Zaczepów Kulowych
Henryk & Zbigniew Nejman
76-200 SŁUPSK ul. Słoneczna 16K
tel/fax (059) 8-414-414; 8-414-413
E-mail: office@autohak.com.pl
www. autohak.com.pl

Towing hitch (without electrical set)

Class: **A50-X** Cat. no. **E47**
Designed for:
Manufacturer: **OPEL**
Model: **VECTRA**
Type: **ESTATE**
produced since 2003 till 2008

Technical data:
D-value: **10,7 kN**
maximum trailer weight: **2000 kg**
maximum vertical cup load: **85 kg**

Approval number according to Directive 94/20/EC: e20*94/20*0020*01

Foreword

This towing hitch is designed according to rules of safety traffic regulations. The towing hitch is a safety component and can be install only by qualified personnel. Any alteration or conversion of the towing hitch is prohibited and would lead to cancellation of design certification. Remove insulating compound and underseal from vehicle (if present) in the area of the matting surfaces of the towing hitch.
The vehicle manufacturer's specifications regarding trailer load and max. vertical cup load are decisive for driving whereat values for the towing hitch cannot be exceeded.
D-value formula:

$$\frac{\text{Max trailer weight [kg]} \times \text{Max vehicle weight [kg]}}{\text{Max trailer weight [kg]} + \text{Max vehicle weight [kg]}} \times \frac{9{,}81}{1000} = D\ [\text{kN}]$$