FITTING INSTRUCTION

Clamp mark in acc. with		Cables joining
ISO	PN	
1	L	Left directional lights
2	+	Rear fog lights
3	31	Ground
4	R	Right directional lights
5	58R	Right side parking lights
6	54	Stoplights
7	58L	Left side parking lights

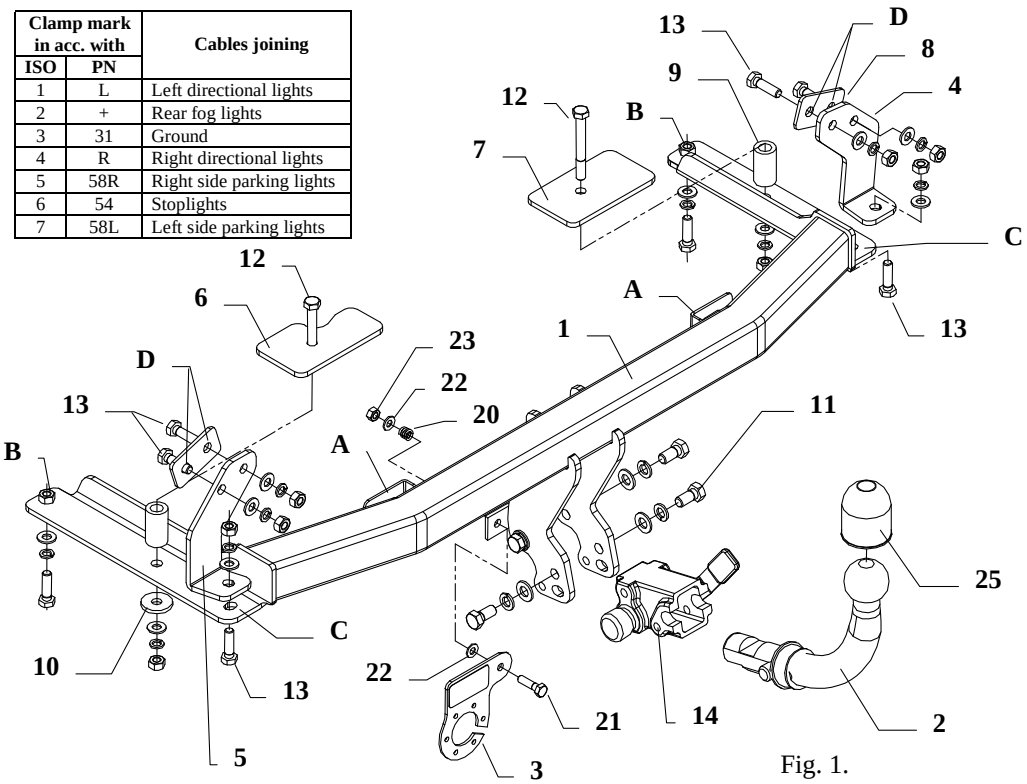

Fig. 1.

This towbar is designed to assembly in following cars:
OPEL CORSA „C" 3-5 doors, produced since 2001 till 2006, catalogue no. **E38A** and is prepared to tow trailers max total weight **1000 kg** and max vertical load **50 kg.**

From manufacturer

Thank you for buying our product. Their reliability has been confirmed in many tests. Reliability of towbar depends also on correct assembly and right operation. For this reasons we kindly ask to read carefully this instruction and apply to hints.
The towbar should be install in points described by a car producer.

The instruction of the assembly

1. Disassemble the bumper and metal reinforcement (this part is not used any more). Take the plastic handles from the metal reinforcement and place it in the towbar at pos. A.
2. Cut the bumper according the fig.2

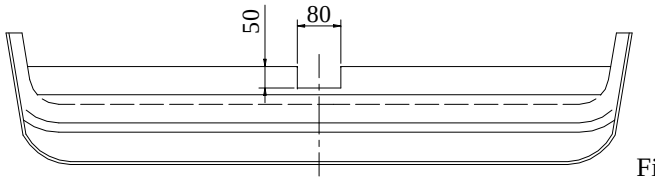

Fig. 2. Cut out

3. Drill two holes per each side (left and right) in the rear panel (use a bit ø11mm)
4. Slide the element (pos. 1) into the chassis member and fix it through the holes pos. B using bolts M10x35mm pos. 13 (use the plain washers ø35x12x4mm and spring washer)
5. Find one hole on the left and right side in the boot, then make them available and slide the sleeves ø25x5, L=44mm pos. 9 and plates:
   - on the left- plate I pos. 6
   - on the right- plate II pos. 7

   fix it loosely using bolts M10x85mm (pos. 12).
6. Position the element (pos. 5) on the left side and element (pos. 4) on the right side and fix it together with element (pos. 8) through the holes (pos. C and D) see the fig.1
7. Reassemble the bumper
8. Fix body of the automat (pos. 14) using bolts M12x25mm (pos. 11) from accessories. Place tow-ball (pos. 2) according to supplied instruction.
9. Fix the socket plate (pos. 3) as shown on the drawing.
10. Tighten all nuts and bolts according to the torque shown in the table
11. Connect the electric wires according to the instructions of the car
12. Complete the paint cover of towbar (during the mounting paint cover could be damaged).

Torque settings for nuts and bolts (8,8):		
M6 - 11 Nm	**M8 -** 25 Nm	**M10 -** 50 Nm
M12 - 87 Nm	**M14 -** 138 Nm	**M16 -** 210 Nm

NOTE

After install the towbar you should get adequate note in registration book (at authorised service station).The car should be equipped with:

- Indicators
- Tow mirrors

After 1000km of exploitation check all bolts and nuts. The ball of towbar must be always kept clear and conserve with a grease.

Towbar accessories:

Pos. 1 Name: Main bar Quantity: 1 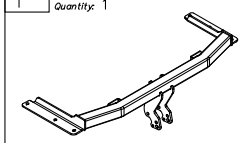	Pos. 6 Name: Plate I Quantity: 1 	Pos. 12 Name: Bolt 8,8 B Quantity: 2 Dim. : M10x85mm 	Pos. 19 Name: Spring washer Quantity: 10 Dim. : Ø 10,2 mm 
	Pos. 7 Name: Plate II Quantity: 1 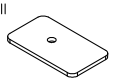	Pos. 13 Name: Bolt 8,8 B Quantity: 8 Dim. : M10x35mm 	Pos. 20 Name: Spring Quantity: 1 
Pos. 2 Name: Tow ball Quantity: 1 	Pos. 8 Name: Rectangular washer Quantity: 2 	Pos. 14 Name: Body of the automat Quantity: 1 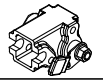	Pos. 21 Name: Bolt 8,8 B Quantity: 1 Dim. : M8x30mm 
Pos. 3 Name: Socket plate Quantity: 1 	Pos. 9 Name: Distance sleeve Quantity: 2 Dim. : Ø25xØ15mm L=44mm 	Pos. 15 Name: Nut 8 B Quantity: 8 Dim. : M10 	Pos. 22 Name: Plain washer Quantity: 2 Dim. : Ø 8,5 mm 
Pos. 4 Name: Right bracke Quantity: 1 	Pos. 10 Name: Washer Quantity: 2 Dim. : Ø42xØ13x6mm 	Pos. 16 Name: Plain washer Quantity: 4 Dim. : Ø 13 mm 	Pos. 23 Name: Nut 8 B Quantity: 1 Dim. : M8 
Pos. 5 Name: Left bracket Quantity: 1 	Pos. 11 Name: Bolt 8,8 B Quantity: 4 Dim. : M12x25mm 	Pos. 17 Name: Plain washer Quantity: 10 Dim. : Ø 10,5 mm 	Pos. 24 Name: Body plug Quantity: 1 
		Pos. 18 Name: Spring washer Quantity: 4 Dim. : Ø 12,2 mm 	Pos. 25 Name: Ball cover Quantity: 1 

PPUH AUTO-HAK Sp.J.

Produkcja Zaczepów Kulowych
Henryk & Zbigniew Nejman
76-200 SŁUPSK ul. Słoneczna 16K
tel/fax (059) 8-414-414; 8-414-413
E-mail: office@autohak.com.pl
www. autohak.com.pl

Towing hitch (without electrical set)

Class: **A50-X** Cat. no. **E38A**
Designed for:
Manufacturer: **OPEL**
Model: **CORSA C**
Type: **3-5 doors**
produced since 2001 till 2006

Technical data:
D-value: **6,1 kN**
maximum trailer weight: **1000 kg**
maximum vertical cup load: **50 kg**

Approval number according to Directive 94/20/EC: e20*94/20*1076*00

Foreword

This towing hitch is designed according to rules of safety traffic regulations. The towing hitch is a safety component and can be install only by qualified personnel. Any alteration or conversion of the towing hitch is prohibited and would lead to cancellation of design certification. Remove insulating compound and underseal from vehicle (if present) in the areas of the matting surfaces of the towing hitch.
The vehicle manufacturer's specifications regarding trailer load and max. vertical cup mass are decisive for driving whereat values for the towing hitch cannot be exceeded.
D-value formula:

$$\frac{\text{Max trailer weight [kg]} \times \text{Max vehicle weight [kg]}}{\text{Max trailer weight [kg]} + \text{Max vehicle weight [kg]}} \times \frac{9{,}81}{1000} = D\ [\text{kN}]$$