FITTING INSTRUCTION

Clamp mark in acc. with		Cables joining
ISO	PN	
1	L	Left directional lights
2	+	Rear fog lights
3	31	Ground
4	R	Right directional lights
5	58R	Right side parking lights
6	54	Stoplights
7	58L	Left side parking lights

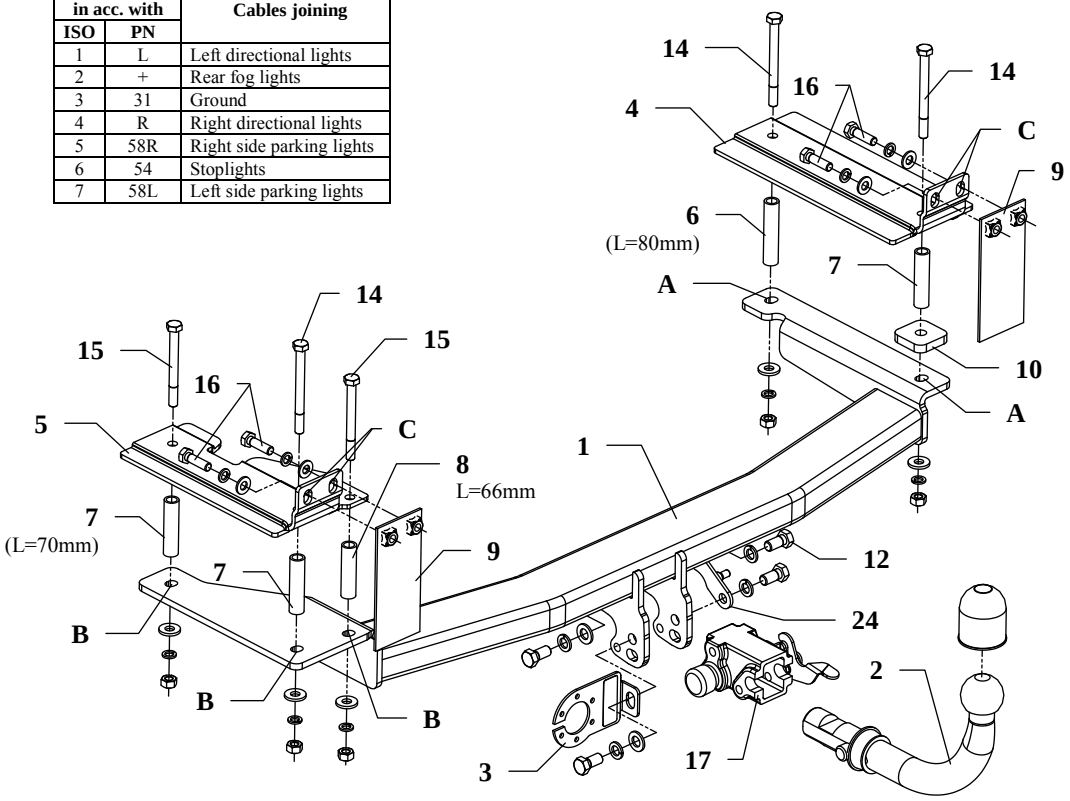

This towbar is designed to assembly in following cars: **OPEL VECTRA B, 4-5 door,** produced since 10.1995 till 05.2002, catalogue no. **E12A** and is prepared to tow trailers max total weight **1700kg** and max vertical mass **75kg**.

From manufacturer

Thank you for buying our product. Their reliability has been confirmed in many tests. Reliability of towbar depends also on correct assembly and right operation. For this reasons we kindly ask to read carefully this instruction and apply to hints.

The towbar should be install in points described by a car producer.

The instruction of the assembly

1. Remove side and bottom covers from the trunk. At the contact surfaces of fish-plates A and B, heat the sealant/insulation material with a dryer and remove it. Also remove the sealant on the underside where the towbar touches the chassis.
2. Place fish-plates pos. 4 and 5 on trunk's floor. Holes A and B are placed on the left and right side trunk's floor, over left and right chassis member. They are marked as dents. Find them using fish-plates 4 and 5. Then take out fish-plates and drill trunk's floor using bit ø17mm in points A and B.
3. Place again fish-plates 4 and 5. Using they find points C on rear wall of he trunk. They are marked by a car producer as dents.
4. Remove fish-plates and knock out dents (see figure 2). Resultant holes enlarge using bit ø12mm. Drill straight through rear wall of the trunk.
5. Place fish-plates pos. 4 and 5again together with distance sleeves (pos. 6, 7 and 8) and bolts M10x110mm (pos. 14) and M10x100mm (pos. 15) as shown on the figure. **NOTE!! Sleeves have different length!** Place plates pos. 9 from outside of rear trunk's wall and fix it using bolts M10x35mm (pos. 16)
6. Place main bar of the towbar (pos. 1) together with square washer (pos. 10) and fix it through holes A and B using five nuts M10 and washers ø25xø11x3mm (pos.11).
7. Fix body of the automat (pos. 17) and the socket plate (pos. 3) using bolts M12x25mm (pos. 12) from accessories. Place tow-ball (pos. 2) according to supplied instruction.
8. Tighten all bolts according to the torque shown in the table.
9. Connect electric wires of 7-poles socket according to the instruction of the car. (Recommend to make at authorized service station).
10. Complete paint layer damaged during installation.

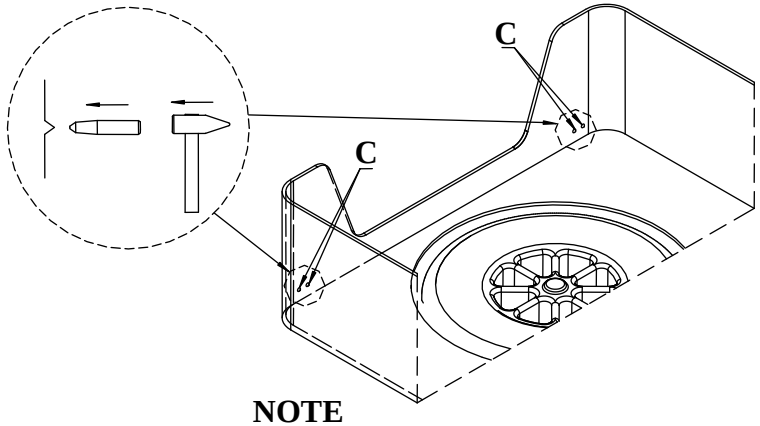

Fig. 2.

NOTE

After install the towbar you should get adequate note in registration book (at authorised service station).The car should be equipped with:

- Indicators
- Tow mirrors

After 1000km of exploitation check all bolts and nuts. The ball of towbar must be always kept clear and conserve with a grease.

Towbar accessories:

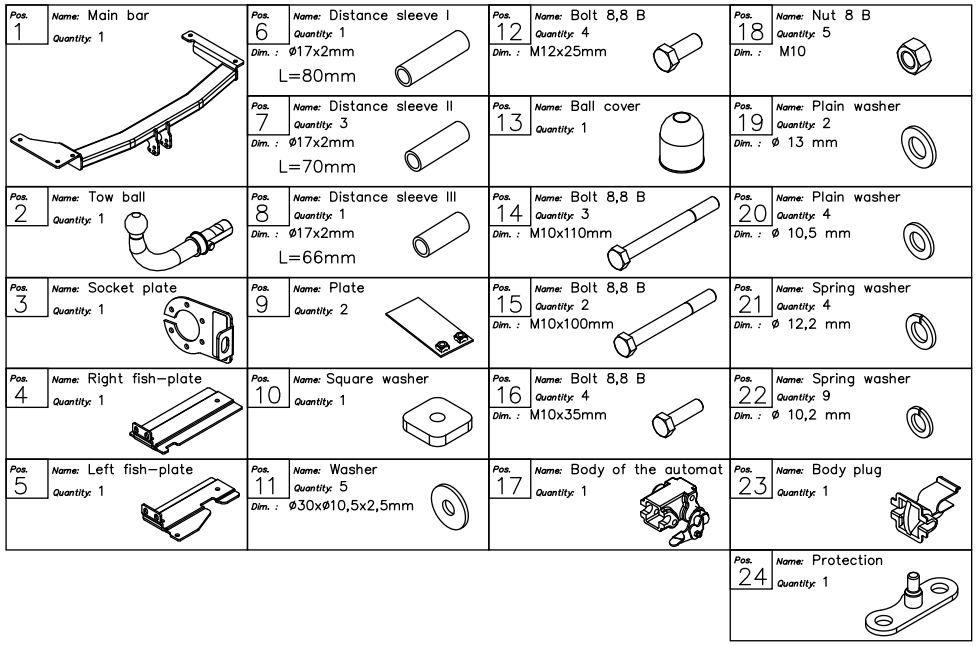

PPUH AUTO-HAK S.J.

Produkcja Zaczepów Kulowych
Henryk & Zbigniew Nejman
76-200 SŁUPSK ul. Słoneczna 16K
tel/fax (059) 8-414-414; 8-414-413
E-mail: office@autohak.com.pl
www. autohak.com.pl

Towing hitch (without electrical set)

Class: **A50-X** Cat. no. **E12A**
Designed for:
Manufacturer: **OPEL**
Model: **VECTRA B**
Type: **4-5 door**
produced since 10.1995 till 05.2002

Technical data:
D-value: **9,3 kN**
maximum trailer weight: **1700 kg**
maximum vertical cup load: **75 kg**

Approval number according to Directive 94/20/EC: e20*94/20*1083*00

Foreword

This towbar is designed according to rules of safety traffic regulations. The towing hitch is a safety component and can be install only by qualified personnel. Any alteration or conversion of the towing hitch is prohibited and would lead to cancellation of design certification. Remove insulating compound and underseal from vehicle (if present) in the area of the matting surfaces of the towing hitch.
The vehicle manufacturer's specifications regarding trailer load and max. vertical cup load are decisive for driving whereat values for the towing hitch cannot be exceeded.
D-value formula:

$$\frac{\text{Max trailer weight [kg]} \times \text{Max vehicle weight [kg]}}{\text{Max trailer weight [kg]} + \text{Max vehicle weight [kg]}} \times \frac{9{,}81}{1000} = D\ [\text{kN}]$$