FITTING INSTRUCTION

Clamp mark in acc. with		Cables joining
ISO	PN	
1	L	Left directional lights
2	+	Rear fog lights
3	31	Ground
4	R	Right directional lights
5	58R	Right side parking lights
6	54	Stoplights
7	58L	Left side parking lights

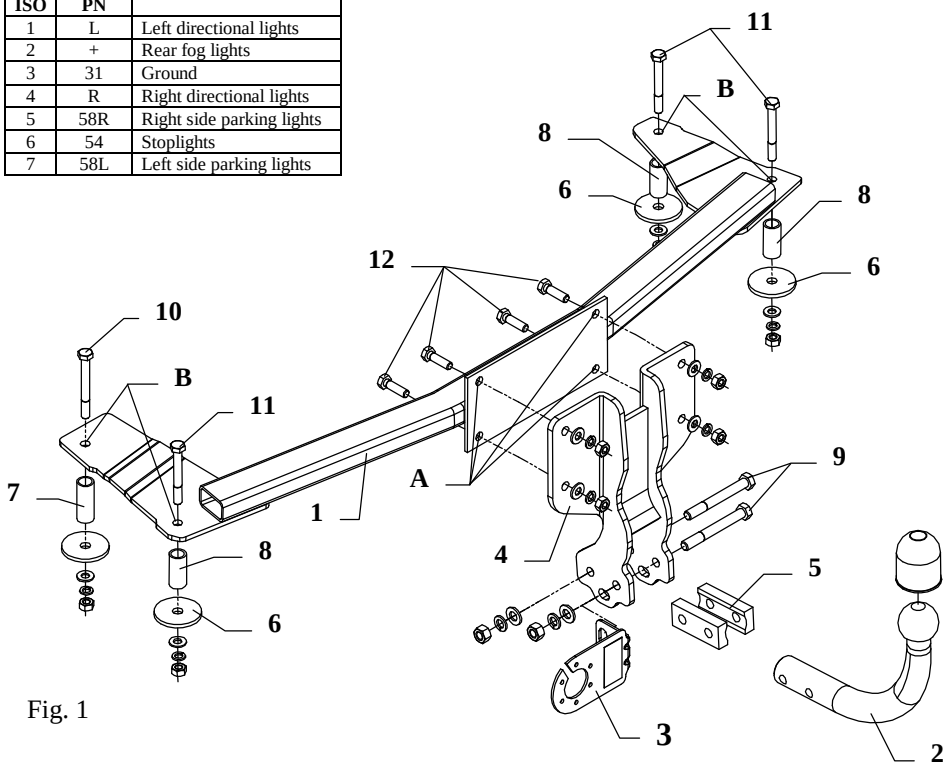

Fig. 1

This towing hitch is designed to assembly in following cars: **OPEL CORSA 'B', 3-5 doors,** produced since 1993 till 2000, catalogue no. **E03** and is prepared to tow trailers max total weight **1000kg** and max vertical load **50 kg**.

From manufacturer

Thank you for buying our product. Their reliability has been confirmed in many tests. Reliability of towing hitch depends also on correct assembly and right operation. For this reasons we kindly ask to read carefully this instruction and apply to hints.

The towing hitch should be install in points described by a car producer.

The instruction of the assembly

1. Disassemble the bumper and cut it according to the fig. 2.

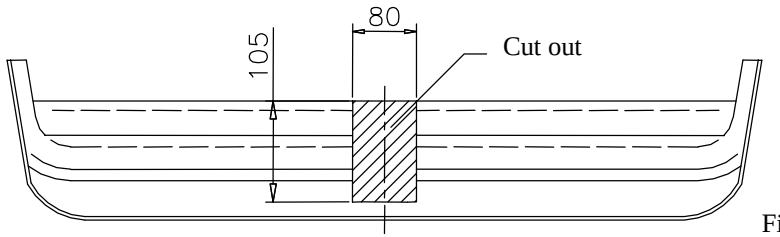

Fig. 2

2. Drill the holes (pos. A) in the rear panel using the drill ø11mm.
3. Drill the holes (pos. B) in the trunk toward the chassis members - use the drill ø11mm.
4. Position the main bar of the towing hitch (pos. 1) in the trunk and fix it with the bracket (pos. 4) through the 4 drilled holes (pos. A) - use bolts M10x35mm (pos. 12).
5. Position the sleeves (pos. 7 and 8) properly at the bottom of the car, then fix it through the holes (pos. B) using suitable bolts M10x80mm (pos. 11) and M10x90mm (pos. 10) together with large washers (pos. 6) – see fig. 1.
6. Position the ball of towing hitch (pos. 2) with overplate (pos. 5) and socket plate (pos. 3) and fix them with M12x100mm (pos. 9) bolts from the towing hitch accessories.
7. Tighten all nuts and bolts according to the torque shown in the table.
8. Connect to the electric wires according to the instructions of the car.
9. Complete the paint cover of towing hitch (during the mounting paint cover could be destroyed).

Torque settings for nuts and bolts (8,8):	
M 8 - 25 Nm	**M 10 -** 55 Nm
M 12 - 85 Nm	**M 14 -** 135 Nm

NOTE

After install the towing hitch you should get adequate note in registration book (at authorised service station).The car should be equipped with:

- Indicators
- Tow mirrors

After 1000km check all bolts and nuts. The ball of towing hitch must be always kept clear and conserve with a grease.

Towing hitch accessories:

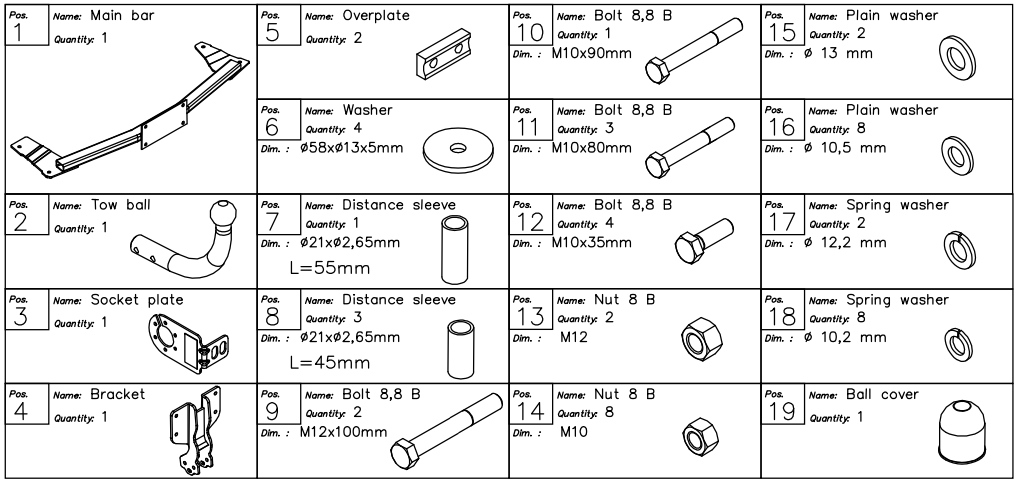

PPUH AUTO-HAK S.J.

Produkcja Haków Holowniczych
Henryk & Zbigniew Nejman
76-200 SŁUPSK ul. Słoneczna 16K
tel/fax (059) 8-414-414; 8-414-413
E-mail: office@autohak.com.pl
www.autohak.com.pl

Towing hitch (without electrical set)

Class: **A50-X** Cat. no. **E03**
Designed for:
Manufacturer: **OPEL**
Model: **CORSA 'B'**
Type: **3-5doors**
produced since 1993 till 2000

Technical data:
D-value: **6,00 kN**
maximum trailer weight: **1000 kg**
maximum vertical cup load: **50 kg**

Approval number acc. to regulations EKG/ONZ 55.01: E20-55R-01 0905

Foreword

This towing hitch is designed according to rules of safety traffic regulations. The towing hitch is a safety component and can be install only by qualified personnel. Any alteration or conversion of the towing hitch is prohibited and would lead to cancellation of design certification. Remove insulating compound and underseal from vehicle (if present) in the area of the matting surfaces of the towing hitch.
The vehicle manufacturer's specifications regarding trailer load and max. vertical cup load are decisive for driving whereat values for the towing hitch cannot be exceeded.
D-value formula:

$$\frac{\text{Max trailer weight [kg]} \times \text{Max vehicle weight [kg]}}{\text{Max trailer weight [kg]} + \text{Max vehicle weight [kg]}} \times \frac{9{,}81}{1000} = D\ [\text{kN}]$$