Towbar accessories:

Pos. 1 Main bar PCS.: 1 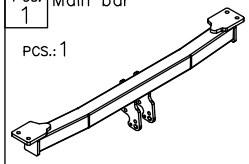	Pos. 5 Right angle bar PCS.: 1 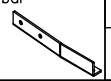	Pos. 10 Bolt 8,8 B M10x35mm PCS.: 7 	Pos. 15 Nut 8 B M12 PCS.: 4 
	Pos. 6 Left bracket PCS.: 1 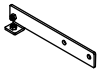	Pos. 11 Plain washer ø13mm PCS.: 4 	Pos. 16 Nut 8 B M10 PCS.: 2 
Pos. 2 Tow ball (mounting set) PCS.: 1 	Pos. 7 Right bracket PCS.: 1 	Pos. 12 Plain washer ø10,5mm PCS.: 7 	
Pos. 3 Socket plate PCS.: 1 	Pos. 8 Fish–plate PCS.: 2 	Pos. 13 Spring washer ø12,2mm PCS.: 4 	
Pos. 4 Left angle bar PCS.: 1 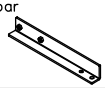	Pos. 9 Bolt 8,8 B M12x40mm PCS.: 4 	Pos. 14 Spring washer ø10,2mm PCS.: 7 	

PPUH AUTO-HAK Sp.J.

Produkcja Zaczepów Kulowych
Henryk & Zbigniew Nejman
76-200 SŁUPSK ul. Słoneczna 16K
tel/fax (059) 8-414-414; 8-414-413
E-mail: office@autohak.com.pl
www. autohak.com.pl

Towing hitch (without electrical set)

Class: **A50-X** Cat. no. **D26A**
Designed for:
Manufacturer: **MERCEDES**
Model: **S CLASS**
Type: **W140**
produced since 1991 till 1999

Technical data:
D-value: **10,7 kN**
maximum trailer weight: **2000 kg**
maximum vertical cup mass: **75 kg**

Approval number according to Directive 94/20/EC: e20*94/20*0623*00

Foreword

This towbar is designed according to rules of safety traffic regulations. The towing hitch is a safety component and can be install only by qualified personnel. Any alteration or conversion of the towing hitch is prohibited and would lead to cancellation of design certification. Remove insulating compound and underseal from vehicle (if present) in the area of the matting surfaces of the towing hitch.
The vehicle manufacturer's specifications regarding trailer load and max. vertical cup load are decisive for driving whereat values for the towing hitch cannot be exceeded.
D-value formula:

$$\frac{\text{Max trailer weight [kg]} \times \text{Max vehicle weight [kg]}}{\text{Max trailer weight [kg]} + \text{Max vehicle weight [kg]}} \times \frac{9{,}81}{1000} = D\ [\text{kN}]$$

FITTING INSTRUCTION

Clamp mark in acc. with		Cables joining
ISO	PN	
1	L	Left directional lights
2	+	Rear fog lights
3	31	Ground
4	R	Right directional lights
5	58R	Right side parking lights
6	54	Stoplights
7	58L	Left side parking lights

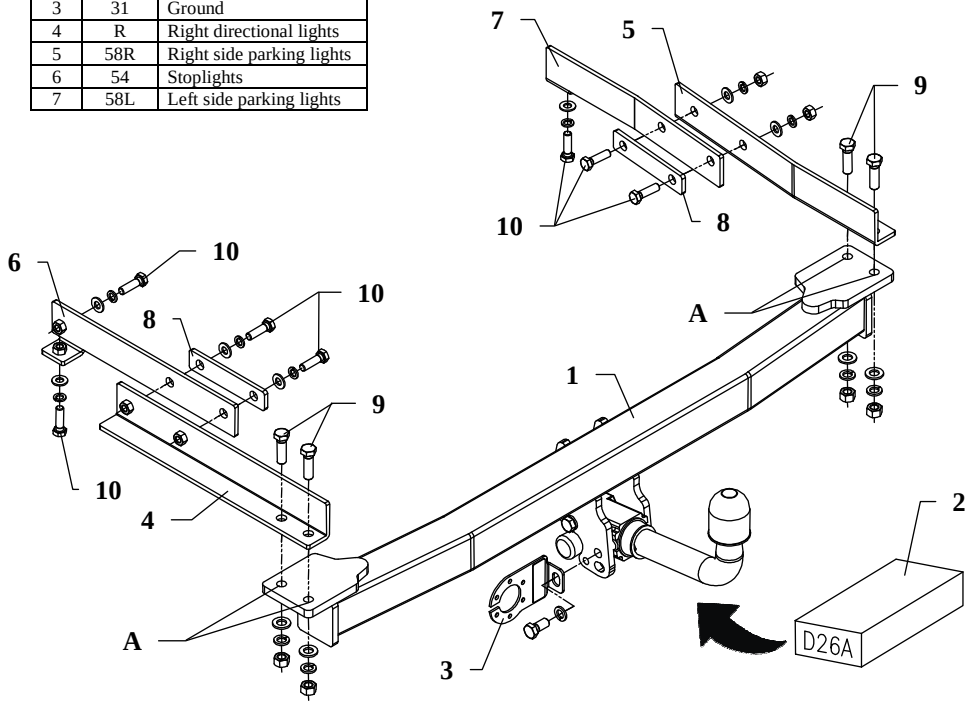

This towbar is designed to assembly in following cars: **MERCEDES S CLASS (W140),** produced since 1991 till 1999, catalogue no. **D26A** and is prepared to tow trailers max total weight **2000 kg** and max vertical mass **75 kg**.

From manufacturer

Thank you for buying our product. Their reliability has been confirmed in many tests. Reliability of towbar depends also on correct assembly and right operation. For this reasons we kindly ask to read carefully this instruction and apply to hints.

The towbar should be install in points described by a car producer.

The instruction of the assembly

1. For the purpose of installings of the towbar one should:
   a. in the trunk:
   - take out the fitted carpet,
   - take out the plastic cover of the spare wheel,
   - take out the spare wheel,
   - take out plastic sides,

   b. underneath the car:
   - take off the back muffler from handle,
   - unscrew the thermal sheet metal,
   - find places pointed by machinery (on the right and left side of the chassis); These places have to be covered with holes of the towbar (pos. A); Drill them using bit ø11mm,
   - find pointed places (on the right and left chassis member) which have to be covered with elements of the towbar: left side (pos. 4 and 6), right side (pos. 5 and 7); One should drill them using bit ø11mm.
2. To so prepared places one ought to fix all elements of the towbar in the following order:
   a. to the trunk:
   - on the left side slip the element of the towbar (pos. 4), on the right side slip the element (pos. 5),

   b. under the car:
   - apply the main bar of the towbar (pos. 1) and fix loosely with the elements (pos. 4 and 5) using bolts M12x40mm (pos. 9).
3. Put element of the towbar (pos. 6 and 7) to the trunk and fix them with elements (pos. 4 and 5) and fish-plates (pos. 8), as shown on the drawing.
4. Install all elements named in point 1 of this instruction.
5. Fix body of the automat and the socket plate (pos. 3) using bolts M12 and place tow-ball (pos. 2) according to supplied instruction.
6. Tighten all bolts according to the torque shown in the table.
7. Connect electric wires of 7-poles socket according to the instruction of the car. (Recommend to make at authorized service station).
8. Complete paint layer damaged during installation.

Torque settings for nuts and bolts (8,8):	
M 8 - 25 Nm	**M 10 -** 55 Nm
M 12 - 85 Nm	**M 14 -** 135 Nm

NOTE

After install the towbar you should get adequate note in registration book (at authorised service station).The car should be equipped with:

- Indicators
- Tow mirrors

After 1000km of exploitation check all bolts and nuts. The ball of towbar must be always kept clear and conserve with a grease.