FITTING INSTRUCTION

Clamp mark in acc. with		Cables joining
ISO	PN	
1	L	Left directional lights
2	+	Rear fog lights
3	31	Ground
4	R	Right directional lights
5	58R	Right side parking lights
6	54	Stoplights
7	58L	Left side parking lights

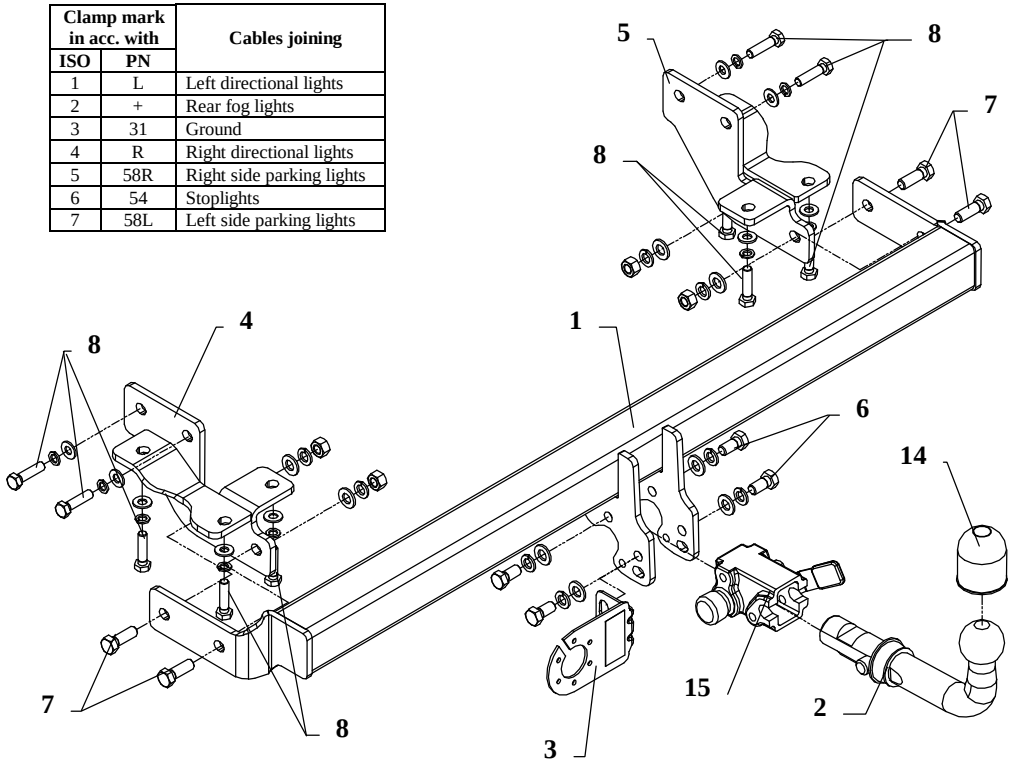

This towbar is designed to assembly in following cars:
MITSUBISHI SPACE WAGON produced since 05.1992 till 09.1998 and **HYUNDAI SANTAMO** produced since 1999, catalogue no. **Z24A** and is prepared to tow trailers max total weight **1800** kg and max vertical load **90** kg.

From manufacturer

Thank you for buying our product. Their reliability has been confirmed in many tests. Reliability of towbar depends also on correct assembly and correct exploitation. For this reasons we kindly ask to read carefully this instruction and apply to hints.

The towbar should be install in points described by a car producer.

The instruction of the assembly

1. To install the towbar you don't need to disassemble the bumper.
2. Take lower the spare whell.
3. Twist off from chassis members original tow handles.
4. In this points (removed handles) screw brackets (pos. 4 and 5) – loosely with bolts M10x1,25x40mm (pos. 8).
5. In the bottom part of the bumper make (in his axis) opening 30x70mm.
6. Between early mounted brackets put main part of the towbar (pos. 1) and screw with bolts M12x35mm (pos. 7).
7. Fix body of the automat (pos. 15) and the socket plate (pos. 3) using bolts M12x25mm (pos. 6) from accessories. Place tow-ball (pos. 2) according to supplied instruction.
8. Tighten all bolts according to the torque shown in the table.
9. Connect electric wires of 7-bolts socket according to the instruction of the car. (Recommend to make at authorized service station)
10. Complete paint layer damaged during installation.

Torque settings for nuts and bolts (8,8):

M6 - 11 Nm	**M8 -** 25 Nm	**M10 -** 50 Nm
M12 - 87 Nm	**M14 -** 138 Nm	**M16 -** 210 Nm

NOTE

After install the towbar you should get adequate note in registration book (at authorised service station).The car should be equipped with:

- Indicators
- Tow mirrors

After 1000km of exploitation check all bolts and nuts. The ball of towbar must be always kept clear and conserve with a grease.

Towbar equipment:

Pos. 1 Name: Main bar Quantity: 1 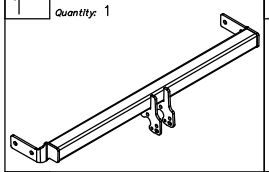	Pos. 4 Name: Left bracket Quantity: 1 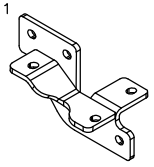	Pos. 7 Name: Bolt 8,8 B Quantity: 4 Dim. : M12x35 	Pos. 12 Name: Spring washer Quantity: 8 Dim. : ø 12,2 mm 
		Pos. 8 Name: Bolt 8,8 B Quantity: 10 Dim. : M10x1,25x40mm 	Pos. 13 Name: Spring washer Quantity: 10 Dim. : ø 10,2 mm 
Pos. 2 Name: Tow ball Quantity: 1 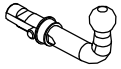	Pos. 5 Name: Right bracket Quantity: 1 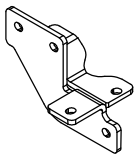	Pos. 9 Name: Nut 8 B Quantity: 4 Dim. : M12 	Pos. 14 Name: Ball cover Quantity: 1 
Pos. 3 Name: Socket plate Quantity: 1 		Pos. 10 Name: Plain washer Quantity: 8 Dim. : ø 13 mm 	Pos. 15 Name: Body of the automat Quantity: 1 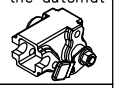
	Pos. 6 Name: Bolt 8,8 B Quantity: 4 Dim. : M12x25mm 	Pos. 11 Name: Plain washer Quantity: 10 Dim. : ø 10,5 mm 	Pos. 16 Name: Body plug Quantity: 1 

PPUH AUTO-HAK Sp.J.

Produkcja Zaczepów Kulowych
Henryk & Zbigniew Nejman
76-200 SŁUPSK ul. Słoneczna 16K
tel/fax (059) 8-414-414; 8-414-413
E-mail: office@autohak.com.pl
www. autohak.com.pl

Towing hitch (without electrical set)

Class: **A50-X** Cat. no. **Z24A**
Designed for:
Manufacturer: **MITSUBISHI**
Model: SPACE WAGON
produced since 05.1992 till 09.1998
Manufacturer: **HYUNDAI**
Model: SANTAMO
produced since 1999

Technical data:
D-value: **9,60 kg**
maximum trailer weight: **1800 kg**
maximum vertical cup load: **90 kg**

Approval number according to Directive 94/20/EC: e20*94/20*1016*00

Foreword

This towing hitch is designed according to rules of safety traffic regulations. The towing hitch is a safety component and can be install only by qualified personnel. Any alteration or conversion of the towing hitch is prohibited and would lead to cancellation of design certification. Remove insulating compound and underseal from vehicle (if present) in the areas of the matting surfaces of the towing hitch.
The vehicle manufacturer's specifications regarding trailer load and max. vertical cup mass are decisive for driving whereat values for the towing hitch cannot be exceeded.
D-value formula:

$$\frac{\text{Max trailer weight [kg]} \times \text{Max vehicle weight [kg]}}{\text{Max trailer weight [kg]} + \text{Max vehicle weight [kg]}} \times \frac{9{,}81}{1000} = D\ [\text{kN}]$$