FITTING INSTRUCTION

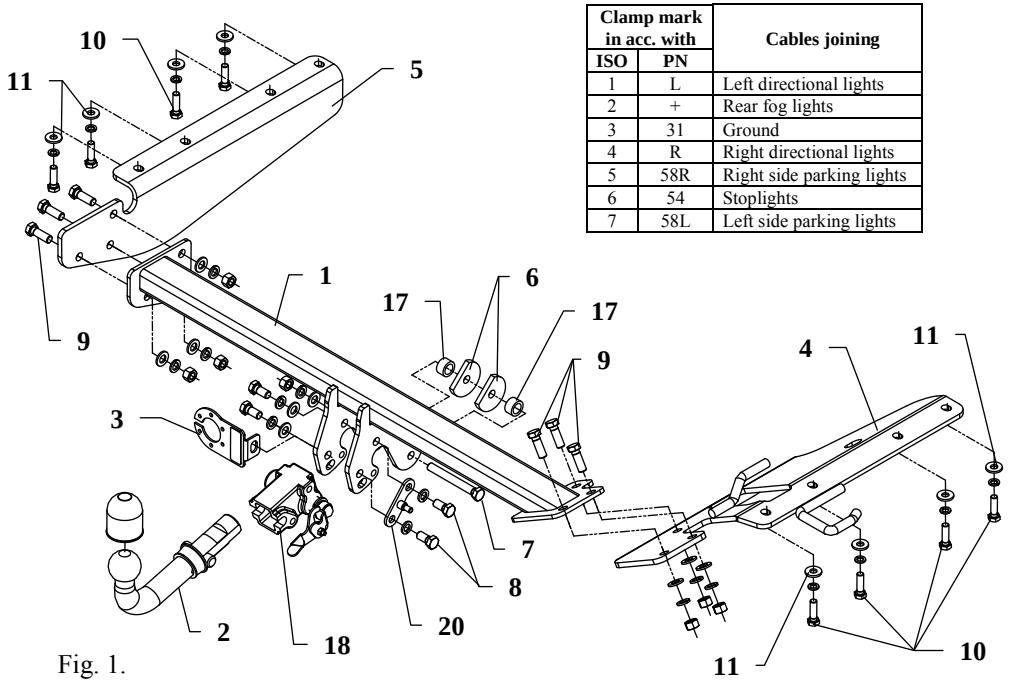

Fig. 1.

Clamp mark in acc. with		Cables joining
ISO	PN	
1	L	Left directional lights
2	+	Rear fog lights
3	31	Ground
4	R	Right directional lights
5	58R	Right side parking lights
6	54	Stoplights
7	58L	Left side parking lights

This towbar is designed to assembly in following cars: **HONDA CR-V,** produced since 01.2007 till 11.2012r., catalogue no. **Y33A** and is prepared to tow trailers max total weight **2000 kg** and max vertical load **100 kg**.

Torque settings for nuts and bolts (8,8):		
M6 - 11 Nm	**M8 -** 25 Nm	**M10 -** 50 Nm
M12 - 87 Nm	**M14 -** 138 Nm	**M16 -** 210 Nm

From manufacturer

Thank you for buying our product. Their reliability has been confirmed in many tests. Reliability of towbar depends also on correct assembly and right operation. For this reasons we kindly ask to read carefully this instruction and apply to hints.

The towbar should be install in points described by a car producer.

The instruction of the assembly

1. Disassemble the rear bumper and rear diffuser.
2. Get lower the muffler from last handles.
3. Rubber handles of the muffler assemble on right bracket of the towbar (pos. 4) – see figure 2.
4. Right bracket (pos. 4) fix loosely to the right chassis member by bolts M10x1,25x35mm (pos. 11) and flat washers (pos. 11).
5. Left bracket (pos. 5) fix loosely to the left chassis member by bolts M10x1,25x35mm (pos. 11) and flat washers (pos. 11).
6. Between mounted brackets (pos. 4 and 5) put main bar of the towbar (pos. 1) and fix it by bolts M12x35mm (pos. 9) and by bolt M12x100mm (pos. 7) to the original towing eye. Use two cut washers (pos. 6) and sleeves (pos.17), see figure 1.
7. Reassemble the bumper after cut out its fragment according to figure 3.
8. Fix body of the automat (pos. 18) and the socket plate (pos. 3) using bolts M12x25mm (pos. 4) from accessories. Place tow-ball (pos. 2) according to supplied instruction.
9. Tighten all bolts according to the torque shown in the table.
10. Connect electric wires of 7-poles socket according to the instruction of the car. (Recommend to make at authorized service station).
11. Complete paint layer damaged during installation.

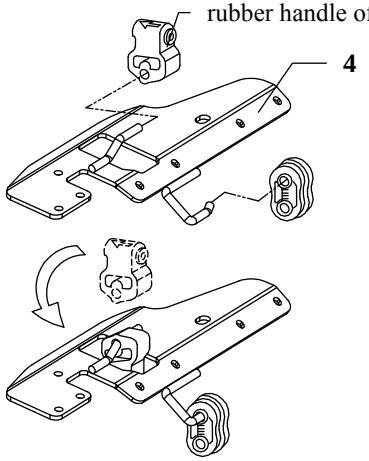

Fig. 2. The manner of the assembly handles of the muffler

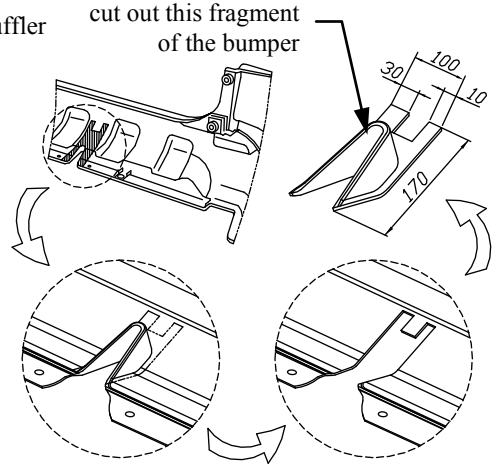

Fig. 3. Cut the bumper

NOTE

After install the towbar you should get adequate note in registration book (at authorised service station). The car should be equipped with:

- Indicators
- Tow mirrors

After 1000km of exploitation check all bolts and nuts. The ball of towbar must be always kept clear and conserve with a grease.

Towbar accessories:

Pos. 1 Main bar PCS.: 1 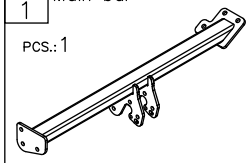	Pos. 5 Left bracket PCS.: 1 	Pos. 10 Bolt 8,8 B M10x1.25x35mm PCS.: 8 	Pos. 15 Spring washer ø10,2mm PCS.: 8 
	Pos. 6 Cut washer ø58xø13x8mm PCS.: 2 	Pos. 11 Plain washer ø30xø10,5x2,5mm PCS.: 8 	Pos. 16 Ball cover PCS.: 1 
Pos. 2 Tow ball PCS.: 1 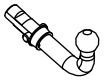	Pos. 7 Bolt 8,8 B M12x100mm PCS.: 1 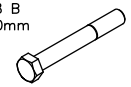	Pos. 12 Nut 8 B M12 PCS.: 7 	Pos. 17 Distance sleeve ø25x4mm L=14mm PCS.: 2 
Pos. 3 Socket plate PCS.: 1 	Pos. 8 Bolt 8,8 B M12x25mm PCS.: 4 	Pos. 13 Plain washer ø13mm PCS.: 9 	Pos. 18 Body of the automat PCS.: 1 
Pos. 4 Right bracket PCS.: 1 	Pos. 9 Bolt 8,8 B M12x35mm PCS.: 6 	Pos. 14 Spring washer ø12,2mm PCS.: 11 	Pos. 19 Body plug PCS.: 1 
			Pos. 20 Protection PCS.: 1 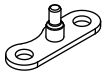

PPUH AUTO-HAK Sp.J.

Produkcja Zaczepów Kulowych
Henryk & Zbigniew Nejman
76-200 SŁUPSK ul. Słoneczna 16K
tel/fax (059) 8-414-414; 8-414-413
E-mail: office@autohak.com.pl
www.autohak.com.pl

Towing hitch (without electrical set)

Class: **A50-X** Cat. no. **Y33A**
Designed for:
Manufacturer: **HONDA**
Model: **CR-V**
produced since 01.2007 till 11.2012

Technical data:
D-value: **10,43 kN**
maximum trailer weight: **2000 kg**
maximum vertical cup load: **100 kg**

Approval number according to Directive 94/20/EC: e20*94/20*0231*00

Foreword

This towbar is designed according to rules of safety traffic regulations. The towing hitch is a safety component and can be install only by qualified personnel. Any alteration or conversion of the towing hitch is prohibited and would lead to cancellation of design certification. Remove insulating compound and underseal from vehicle (if present) in the area of the matting surfaces of the towing hitch.
The vehicle manufacturer's specifications regarding trailer load and max. vertical cup load are decisive for driving whereat values for the towing hitch cannot be exceeded.
D-value formula:

$$\frac{\text{Max trailer weight [kg]} \times \text{Max vehicle weight [kg]}}{\text{Max trailer weight [kg]} + \text{Max vehicle weight [kg]}} \times \frac{9{,}81}{1000} = D\ [\text{kN}]$$